USER GUIDE

SAFETY • INSTALLATION & INTEGRATION • OPERATING INSTRUCTIONS • MAINTENANCE • SERVICE

2000 Series • 2224ZWC • 24" Wine Captain® Model

Contents

Intro

Safety

- Safety and Warning
- Disposal

Installation

- Environmental Requirements
- Electrical
- Cutout Dimensions
- Product Dimensions
- Side by Side Installation
- Anti-Tip Bracket
- General Installation
- Integrated Panel Dimensions
- Integrated Grille / Plinth Dimensions
- Integrated Panel Installation
- Grille / Plinth Installation
- Door Swing
- Door Stop
- Door Adjust
- Wood Trim Finishing

Operating Instructions

- First Use
- Control Operation
- Sabbath Mode
- Airflow and Product Loading
- U-Line Wine Guide
- Recommended Wine Storage

Maintenance

- Cleaning
- Cleaning Condenser
- Wine Rack Installation
- Extended Non-Use

Service

- Accessories
- Troubleshooting
- Warranty

WELCOME TO U-LINE

Congratulations on your U-Line purchase. Your product comes from a company with over five decades and three generations of premium modular ice making, refrigeration, and wine preservation experience. U-Line continues to be the American leader, delivering versatility and flexibility for multiple applications including residential, light commercial, outdoor and marine use. U-Line's complete product collection includes modular Wine Captain® Models, Beverage Centers, Clear Ice Machines, Crescent Ice Makers, Glass & Solid Door Refrigerators, Drawer Models, Freezers, and Combo® Models.

U-Line has captivated those with an appreciation for the finer things with exceptional functionality, style, inspired innovations and attention to even the smallest details. We are known and respected for our unwavering dedication to product design, quality and selection. U-Line is headquartered in Milwaukee, Wisconsin with a west coast office located in Laguna Beach, California and European support in Dublin, Ireland. U-Line has shipped product to five continents for over two decades and is proud to have the opportunity to ship to you.

PRODUCT INFORMATION

Looking for additional information on your product? User Guides, Quick Reference Guides, CAD Drawings, Compliance Documentation, and Product Warranty information are all available for reference and download at u-line.com under Documentation.

PROPERTY DAMAGE / INJURY CONCERNS

In the unlikely event property damage or personal injury is suspected related to a U-Line product, please take the following steps:

1. U-Line Customer Care must be contacted immediately at +1.800.779.2547.
2. Service or repairs performed on the unit without prior written approval from U-Line is not permitted. If the unit has been altered or repaired in the field without prior written approval from U-Line, claims will not be eligible.

SERVICE INFORMATION

Answers to Customer Frequently Asked Questions are available at u-line.com under Customer Care or you may contact our Customer Care group directly, contact information below.

GENERAL INQUIRIES

U-Line Corporation
8900 N. 55th Street
Milwaukee, Wisconsin 53223 USA
Monday - Friday 8:00 am to 4:30 pm CST
T: +1.414.354.0300
F: +1.414.354.7905
Email: sales@u-line.com
u-line.com

SERVICE & PARTS ASSISTANCE

Monday - Friday 8:00 am to 5:30 pm CST
T: +1.800.779.2547
F: +1.414.354.5696
Service Email: onlineservice@u-line.com
Parts Email: onlineparts@u-line.com

CONNECT WITH US

Designed, engineered and assembled in WI, USA

Safety and Warning

NOTICE

Please read all instructions before installing, operating, or servicing the appliance.

Use this appliance for its intended purpose only and follow these general precautions with those listed throughout this guide:

SAFETY ALERT DEFINITIONS

Throughout this guide are safety items labeled with a Danger, Warning or Caution based on the risk type:

⚠ DANGER

Danger means that failure to follow this safety statement will result in severe personal injury or death.

⚠ WARNING

Warning means that failure to follow this safety statement could result in serious personal injury or death.

⚠ CAUTION

Caution means that failure to follow this safety statement may result in minor or moderate personal injury, property or equipment damage.

⚠ DANGER

This unit contains R600a (Isobutane) which is a flammable hydrocarbon. It is safe for regular use. Do not use sharp objects to expedite defrosting. Do not service without consulting the "R600a specifications" section included in the User Guide. Do not damage the refrigerant circuit.

⚠ WARNING

Service must be done by factory authorized service personnel. Any parts shall be replaced with like components. Failure to comply could increase the risk of possible ignition due to incorrect parts or improper service.

Disposal and Recycling

⚠ DANGER

RISK OF CHILD ENTRAPMENT. Before you throw away your old refrigerator or freezer, take off the doors and leave shelves in place so children may not easily climb inside.

If the unit is being removed from service for disposal, check and obey all federal, state and local regulations regarding the disposal and recycling of refrigeration appliances, and follow these steps completely:

1. Remove all consumable contents from the unit.

2. Unplug the electrical cord from its socket.

3. Remove the door(s)/drawer(s).

Environmental Requirements

This unit is designed to operate between 50°F (10°C) and 100°F (37°C). Higher ambient temperatures may reduce the unit's ability to reach low temperatures and/or reduce ice production on applicable models.

For best performance, keep the unit out of direct sunlight and away from heat generating equipment.

In climates where high humidity and dew points are present, condensation may appear on outside surfaces. This is considered normal. The condensation will evaporate when the humidity drops.

⚠ CAUTION

Damages caused by ambient temperatures of 40°F (5°C) or below are not covered by the warranty.

Electrical

⚠ WARNING

SHOCK HAZARD — Electrical Grounding Required. Never attempt to repair or perform maintenance on the unit until the electricity has been disconnected.

Never remove the round grounding prong from the plug and never use a two-prong grounding adapter.

Altering, cutting of power cord, removal of power cord, removal of power plug, or direct wiring can cause serious injury, fire and or loss of property and or life, and will void the warranty.

Never use an extension cord to connect power to the unit.

Always keep your working area dry.

NOTICE

Electrical installation must observe all state and local codes. This unit requires connection to a grounded (three-prong), polarized receptacle that has been placed by a qualified electrician.

The unit requires a grounded and polarized 115 VAC, 60 Hz, 15A power supply (normal household current). An individual, properly grounded branch circuit or circuit breaker is recommended. GFCI (ground fault circuit interrupter) is usually not required for fixed location appliances and is not recommended for your unit because a GFCI could be prone to nuisance tripping. However, be sure to consult your local codes.

See CUT-OUT DIMENSIONS for recommended receptacle location.

Cutout Dimensions

PREPARE SITE

Your U-Line product has been designed exclusively for a built-in installation. When built-in, your unit does not require additional air space for top, sides, or rear. However, the front grille (plinth strip/base fascia) must NOT be obstructed.

⚠ CAUTION

Unit can NOT be installed behind a closed cabinet door.

U-Line products are designed and manufactured to be installed in the specified cutout openings shown, and variance to the floors or cabinetry must be accounted for in your installation.

CUTOUT DIMENSIONS

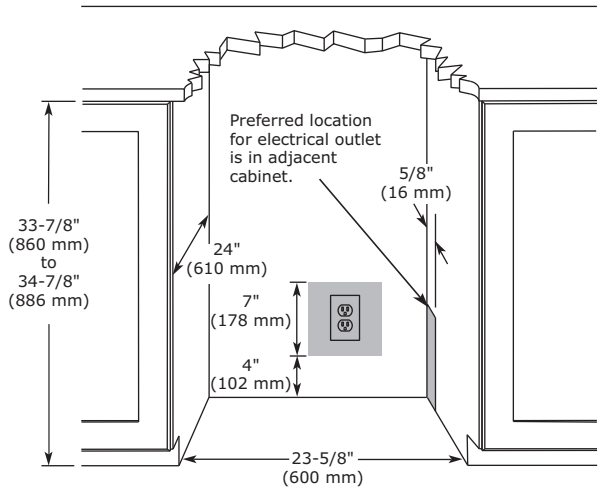

Product Dimensions

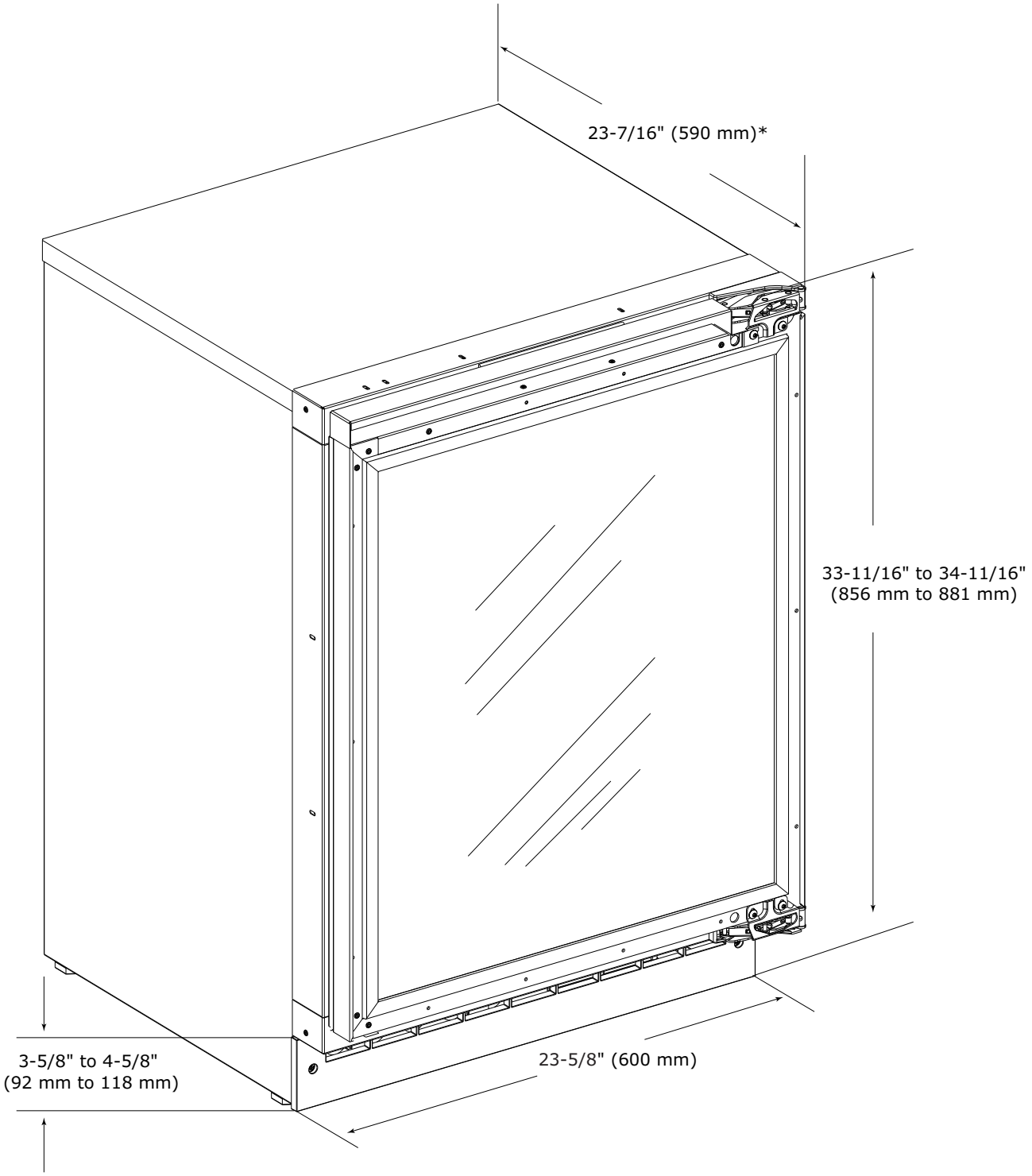

*Includes 3/4" (20 mm) integrated panel

Side-by-Side Installation

OTHER SITE REQUIREMENTS

Side-by-Side Installation

Units must operate from separate, properly grounded electrical receptacles placed according to each unit's electrical specifications requirements.

Cutout width for a side-by-side installation is the total of the widths listed under Cutout Dimensions in each unit's Installation Guide. Each door can be opened individually (one at a time) without interference.

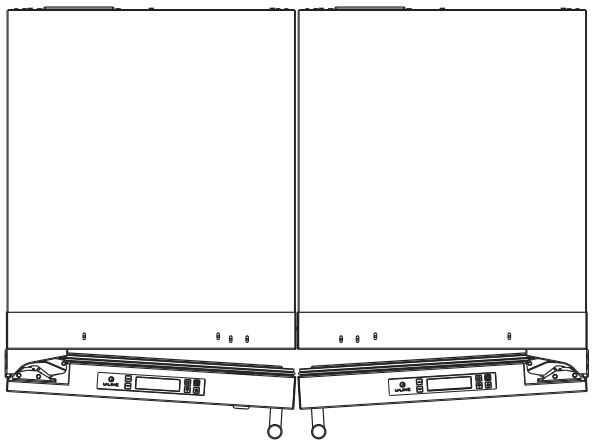

However, to ensure unobstructed door swing (opening both doors at the same time), 1/4" (6.4 mm) of space needs to be maintained between the units.

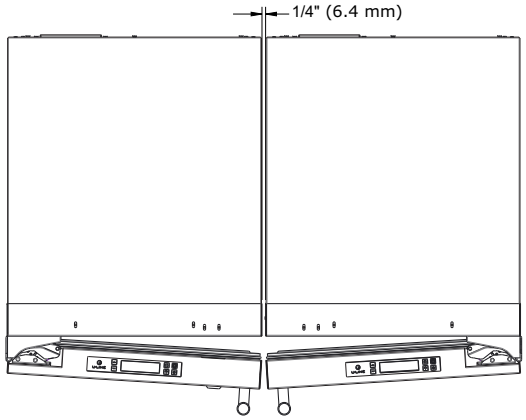

Hinge-by-Hinge Installation (Mullion)

When installing two units hinge-by-hinge, 13/16" (22 mm) is required for integrated models. Additional space may be needed for any knobs, pulls or handles installed.

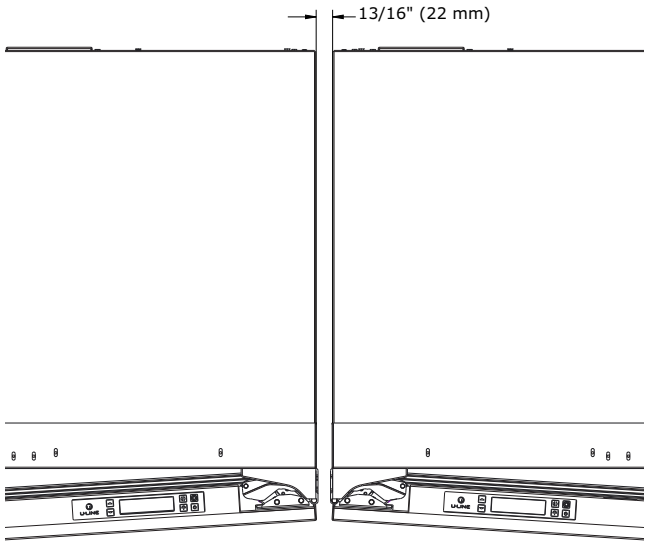

Stainless steel models which include the standard stainless handle will require 4-9/16" (116 mm) to allow both doors to open to 90° at the same time.

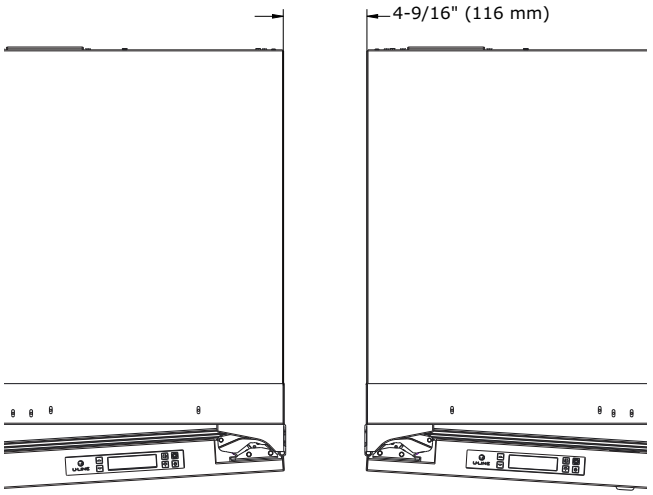

Anti-Tip Bracket

⚠ CAUTION

The anti-tip bracket must be installed to prevent the unit from tipping when doors are fully opened or excess weight is placed on the front of the unit.

The anti-tip bracket has multiple mounting options. Mounting will depend on your particular cabinet configuration. Follow the instructions below to secure the anti-tip plate to the unit. Locate your anti-tip bracket and 5 #8x5/8" screws included with your unit.

TOP MOUNT

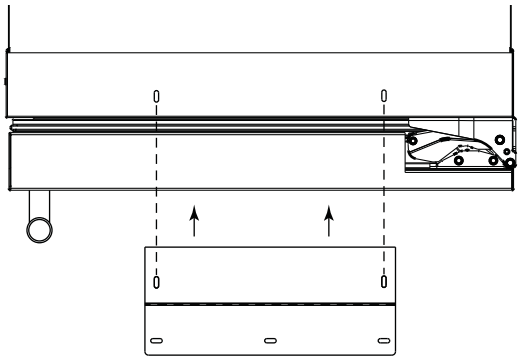

Top mount configurations work well with fully secured wood or laminate countertops.

1. Align the bracket on top of your unit as shown above. The bracket must be used to ensure a secure mount.

2. Using 2 of the supplied #8x5/8" screws, install screws into the plate using a #2 Phillips head screwdriver.

3. Completely slide the unit into its position in the cabinet. Be certain unit height is properly adjusted. (See GENERAL INSTALLATION).

4. Open door completely. Make certain door clears surrounding cabinetry.

5. Using a 3/32" drill bit, drill 3 pilot holes 5/8" (16 mm) deep into bottom of counter top. Use the anti-tip bracket as a template.

6. Install the 3 remaining #8x5/8" screws into the plate using a #2 Phillips head screwdriver.

SIDE MOUNT

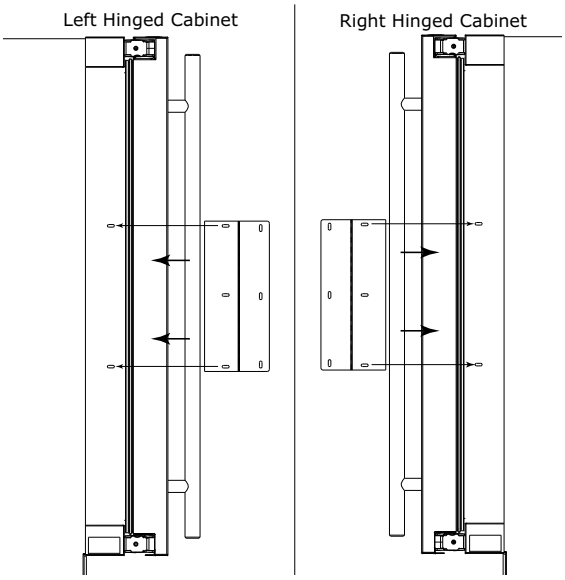

Side mount configurations work well if you have a granite countertop or do not wish to mount the bracket to the underside of your countertop.

1. Align the bracket to the hinge side of the unit as shown above.

2. Using 2 of the supplied #8x5/8" screws, install screws into the plate using a #2 Phillips head screwdriver.

3. Completely slide the unit into its position in the cabinet. Be certain unit height is properly adjusted. (See GENERAL INSTALLATION).

4. Open door completely. Make certain door clears surrounding cabinetry.

5. Using a 3/32" drill bit, drill 3 pilot holes 5/8" (16 mm) deep into cabinetry frame using the anti-tip bracket as a template.

6. Install the 3 remaining 3 #8x5/8" screws into the plate using a #2 Phillips head screwdriver.

General Installation

LEVELING INFORMATION

1. Use a level to confirm the unit is level. Level should be placed along top edge and side edge as shown.

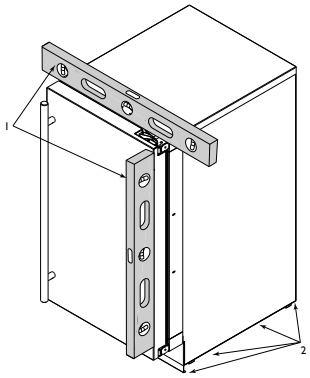

2. If the unit is not level, remove grille and adjust feet as necessary.

3. Confirm the unit is level after each adjustment and repeat the previous steps until the unit is level.

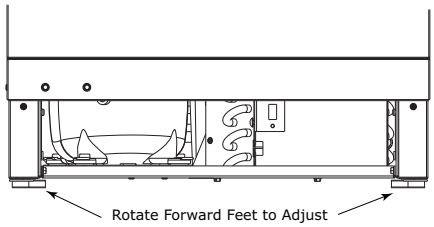

INSTALLATION TIP

If the room floor is higher than the floor in the cutout opening, adjust the rear feet to achieve a total unit rear height of 1/8" (3 mm) less than the opening's rear height. Shorten the unit height in the front by adjusting the front feet. This allows the unit to be gently tipped into the opening. Adjust the front feet to level the unit after it is correctly positioned in the opening.

INSTALLATION

1. Plug in the power cord.

2. Gently push the unit into position. Be careful to not entangle the power cord, water line and drain line.

3. Re-check the leveling, from front to back and side to side. Make any necessary adjustments. The unit's top surface should be approximately 1/8" (3 mm) below the countertop.

4. Install the anti-tip bracket.

5. Remove the tape from the glass shelves and wipe out the inside of the unit with a clean, water-dampened cloth.

Integrated Panel Dimensions

INTEGRATED FRAME

NOTICE

Due to differences in surrounding cabinetry the panel may not perfectly align with door. The procedure below is designed to provide a finished integrated panel that seamlessly integrates with surrounding cabinetry.

Panel Preparation

A full integrated door panel completely covers the door frame and provides a built-in appearance.

NOTICE

The door panel must not weigh more than 20 lbs (10 kg).

It is important to ensure that all drilled holes are drilled to the correct depth in order to avoid splits in the wood when hardware is installed.

1. Cut the panels to the dimensions listed in the diagram below.

2. Optional: Stain or Finish panel to desired stain or color. Be sure to closely follow the instructions provided by the manufacturer.

3. Optional: Install handles and hardware.

NOTICE

When applying an integrated frame to a unit, ensure that both sides are finished in order to prevent warping. In some frame installations, the panel may be visible through the glass while the door is open.

Integrated Frame Dimensions

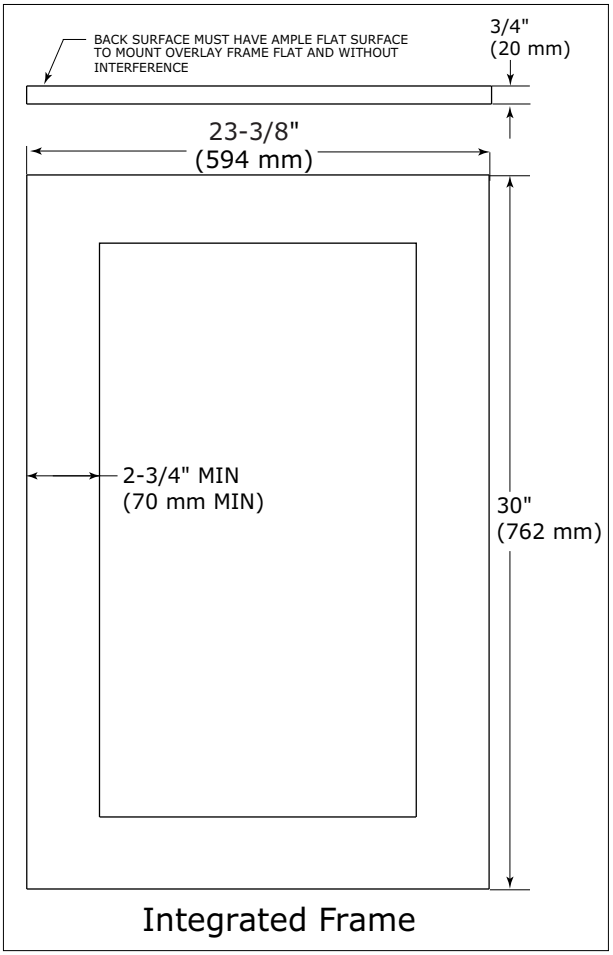

Integrated Frame

Handleless Integrated Frame

The following procedure is designed to provide a finished, handleless frame for a 24" (600 mm) door that seamlessly integrates with its surrounding cabinetry.

Note: Many cabinet manufacturers provide a ready solution for a handleless, integrated design that can be easily applied to your U-Line 3000 Series model. Consult your cabinet manufacturer for applicable design and installation details. The cabinet manufacturer's solution to this design and integration detail will often result in an integrated frame solution wherein the size of the frame may result in a height dimension taller than what we specify. This can be achieved provided the additional height is positioned above the appliance door.

NOTICE

The integrated frame aligns with the surrounding cabinetry and, due to differences in cabinetry, may not align perfectly with the door.

The appliance will need up to 34-1/2" (876 mm) to the underside of the counter to leave room for leveling adjustments.

A single prepared frame with insert must not weigh more than 20 lbs (10 kg).

Integrated Frame Preparation

1. Cut the main panel to the appropriate dimensions below. For details, see the drawings on the next page.

Unit width	Panel width	Panel depth
24" (600 mm)	23-3/8" (594 mm)	28-13/16" (732 mm)

2. Create the top design for the handleless feature and the 1/8" notch for the insert(s) indicated on the Top Detail drawing, on the next page.
3. Prepare the insert(s) that will back up the handleless design. Wooden Insert – Cut 1/8" thick wooden insert(s) to the dimensions below.

Unit width	Insert width	Insert depth
24" (600 mm)	23-3/8" (594 mm)	3-1/2" (89 mm)

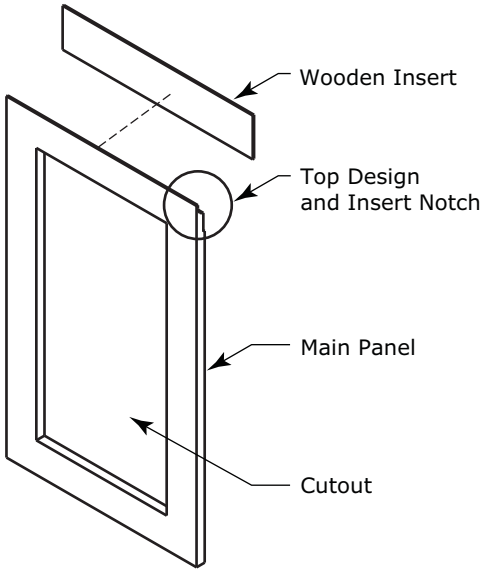

Integrated Frame

4. Optional: Stain or finish frame and wooden insert to desired stain or color. Be sure to closely follow the instructions provided by the manufacturer.

NOTICE

If finishing panel or wooden insert, all sides must be finished to prevent warping.

5. Attach the insert to the frame. Wood glue or equivalent adhesive should be used to attach insert to frame.

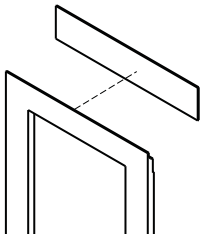

Attach Wooden Insert

Handleless Integrated Frame Dimensions

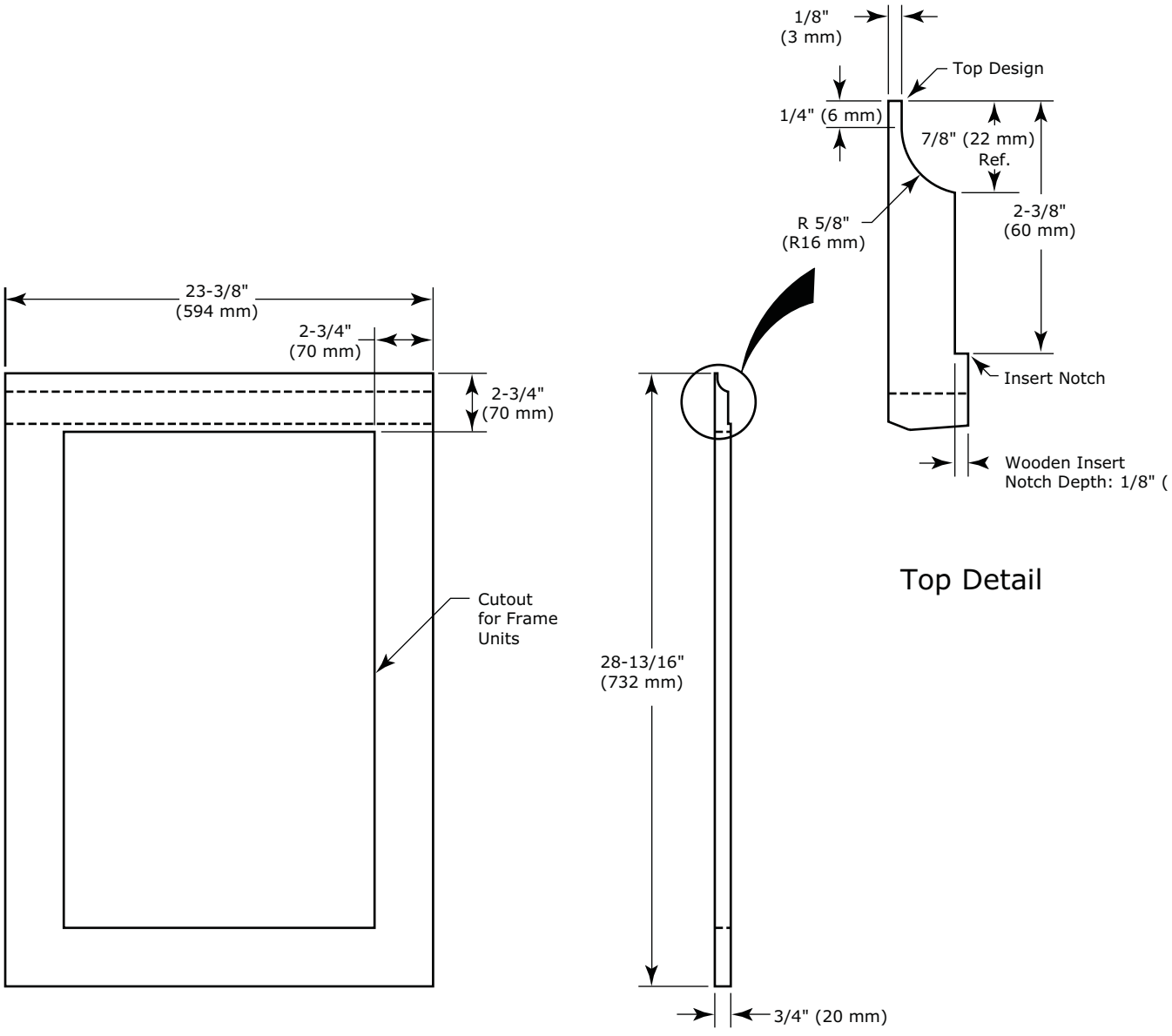

Top Detail

Wooden Insert Dimensions

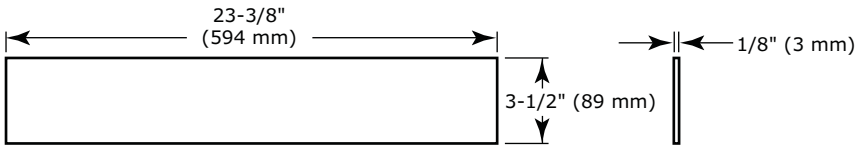

Extended Integrated Frame

NOTICE

Due to differences in surrounding cabinetry the panel may not perfectly align with door. The procedure below is designed to provide a finished panel that seamlessly integrates with surrounding cabinetry.

Panel Preparation

An extended integrated panel can be used to maintain alignment with an adjacent extended cabinet height or a reduced toe-kick/grille application.

1. Cut the panels to the dimensions listed in the diagram on the next page.

2. Optional: Stain or Finish panel to desired stain or color. Be sure to closely follow the instructions provided by the manufacturer.

3. Optional: Install handles and hardware.

NOTICE

The door panel must not weigh more than 20 lbs (10 kg).

It is important to ensure that all drilled holes are drilled to the correct depth in order to avoid splits in the wood when hardware is installed.

Appliance will need up to 34-1/2" (876.3 mm) to the under side of the counter to leave room for leveling adjustments.

When applying an integrated frame to a unit, ensure that both sides are finished in order to prevent warping. In some installations, the panel may be visible through the glass while the door is open.

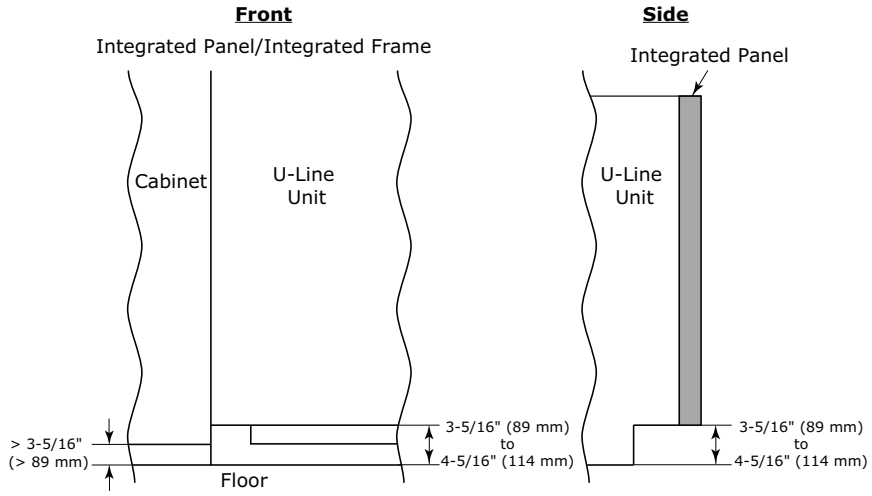

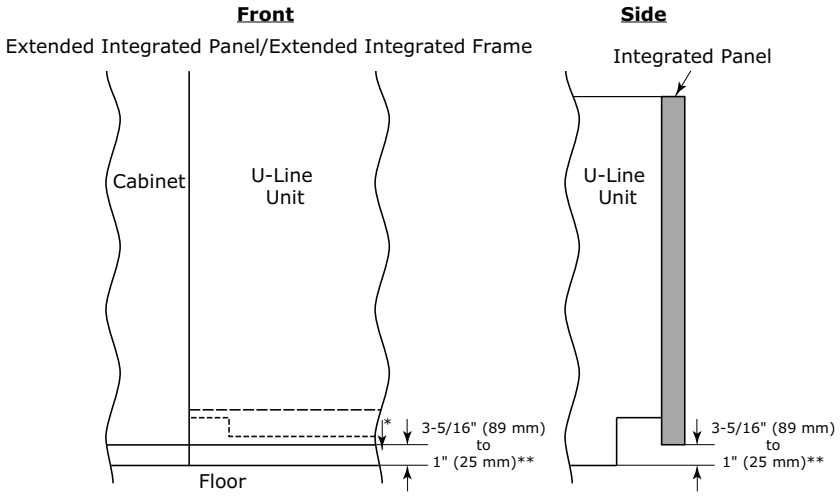

* Panel can extend beyond the door frame.

** A minimum of 1" (25 mm) from the floor is required for proper ventilation.

Extended Integrated Frame Dimensions

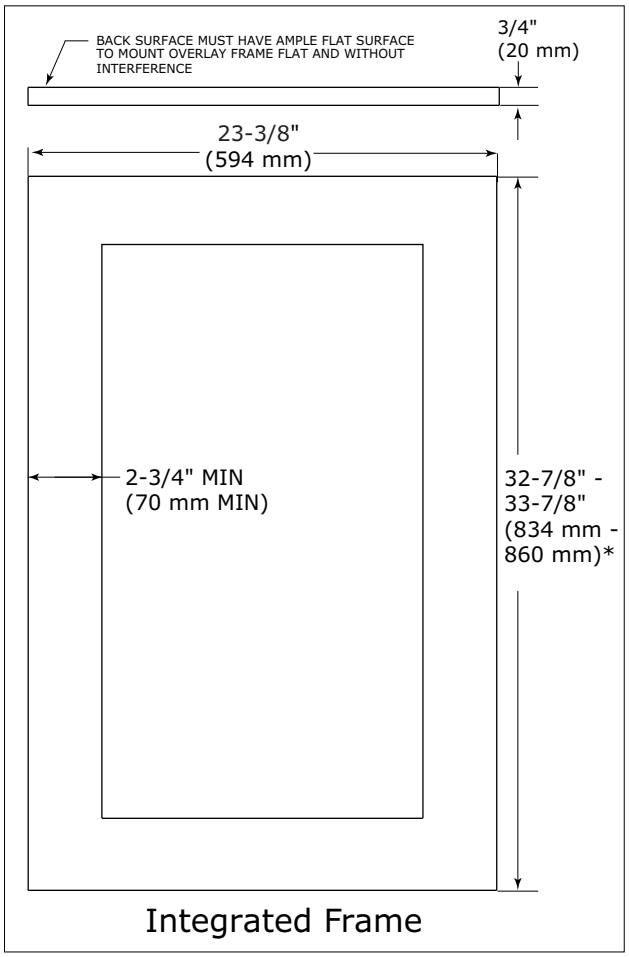

* A minimum of 1" (25 mm) is required from the floor to the bottom of the extended integrated panel/frame for proper ventilation.

NOTICE

The minimum border thickness for a 30" (762 mm) tall integrated frame is 2-3/4" (70 mm). The top/bottom border of the frame must account for any additional length.

Integrated Grille - Plinth Dimensions

PREPARE AND INSTALL INTEGRATED GRILLE (PLINTH STRIP/BASE FASCIA)

1. Use the dimensions provided in the diagram to cut and shape your integrated grille (plinth strip/base fascia) panel. Recommended panel thickness is between 1/4" (6 mm) and 3/8" (9 mm).

2. Finish or stain your grille (plinth strip/base fascia) panel to match your surrounding furniture. Finish front, back and edges to prevent warping. Carefully follow the manufacturer's recommendations for finish application and cure times.

3. Apply double sided tape to the backside of the integrated grill (plinth strip/base fascia). Use the diagram below for reference. U-Line recommends 3M™ VHB™ tape, a high strength bonding tape.

Apply Tape To Shaded Area

4. Remove backing paper from double sided tape.

5. Carefully align grille (plinth strip/base fascia) over integrated panel and press into position.

INTEGRATED GRILLE (PLINTH STRIP/BASE FASCIA) DIMENSIONS

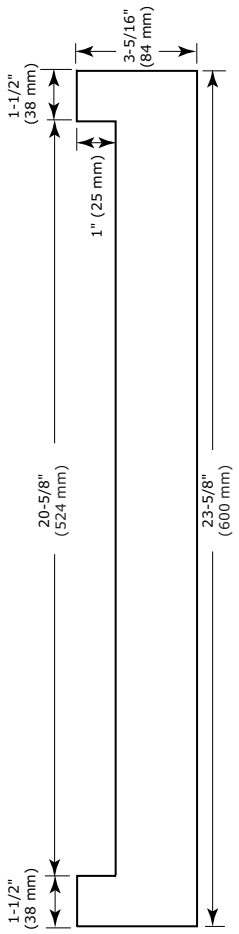

Integrated Panel Installation

1. Fully open door.

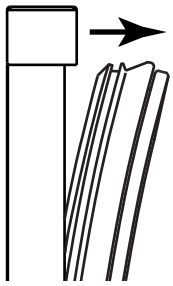

2. Starting at corner, pull gasket away from door.

3. Continue to pull gasket free from gasket channel.

4. Upon removal, lay gasket down on a flat surface.

5. The panel should be aligned with the outside edge (opposite the hinge) and high enough to align with the highest point in the door.

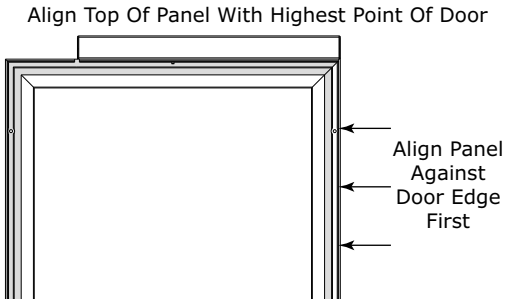

NOTICE

Due to differences in floor construction or surrounding cabinetry, the panel may not sit flush with the top of the door.

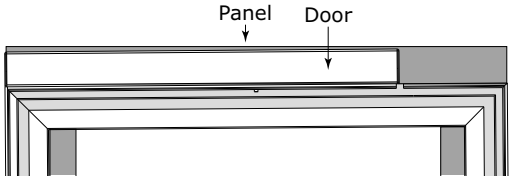

6. Secure integrated panel to door using clamps. A robust tape may also be used. U-Line recommends the use of bar clamps to secure the panel to the door. If using tape, be certain the tape will not damage panel finish upon removal.

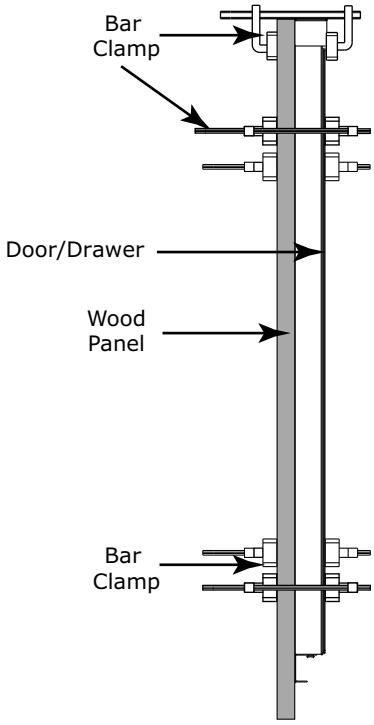

7. Using a 7/64" (3 mm) drill bit, drill 6 pilot holes into the wood panel 1/2" (12 mm) deep using the holes in the door frame as a guide.

NOTICE

It is important to ensure that all drilled holes are drilled to the correct depth in order to avoid splits in the wood when hardwood is installed.

8. Locate 6 of the #6x 1-1/2" (38 mm) screws provided with your unit.

9. Using a Phillips screwdriver, place one screw into each of the 6 pilot holes and screw down. Do not overtighten screws.

10. Be sure the screws force their way past the opening on the gasket channel and sit flush against the bottom of the channel.

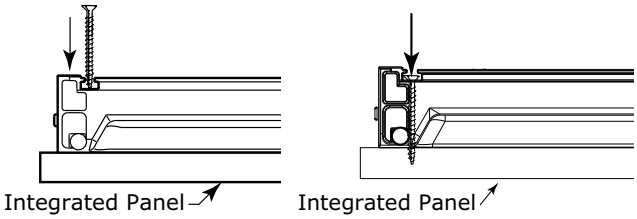

11. Remove clamps from door.

NOTICE

If panel requires additional adjustment after removing clamps, slightly loosen each screw and adjust panel as necessary. Tighten screws upon completion.

12. Starting at the corners, re-install the gasket into the gasket channel in the frame. Make sure the gasket is fully seated. This may take some force.

Grille - Plinth Installation

REMOVING AND INSTALLING GRILLE (PLINTH STRIP/BASE FASCIA)

⚠ WARNING

Disconnect electric power to the unit before removing the grille (plinth strip/base fascia).

⚠ WARNING

DO NOT touch the condenser fins. The condenser fins are SHARP and can be easily damaged.

Removing the grille (plinth strip/base fascia)

1. Disconnect power to the unit.
2. Loosen the two screws (1).
3. Remove grille (plinth strip/base fascia) (2) from unit.

Installing the grille

1. Align cabinet and grille holes and secure, but do not over tighten grille (plinth strip/base fascia) screws (1).
2. Reconnect power to the unit.

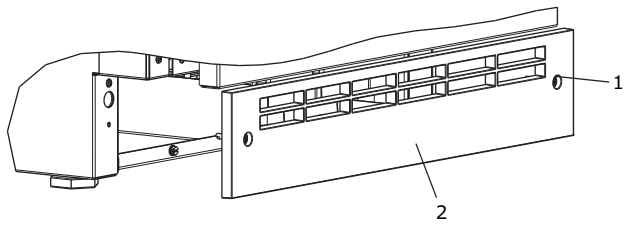

Door Swing

For Integrated models that are installed adjacent to a wall, 1/4" (6 mm) clearance is recommended from wall on hinge side to allow the door to open 90°. Allow for additional space for any knobs or pulls installed on the integrated panel/frame.

Stainless Steel models that are installed adjacent to a wall require 2-1/4" (57 mm) door clearance on hinge side to allow for door handle.

Units have a zero clearance when installed adjacent to cabinets.

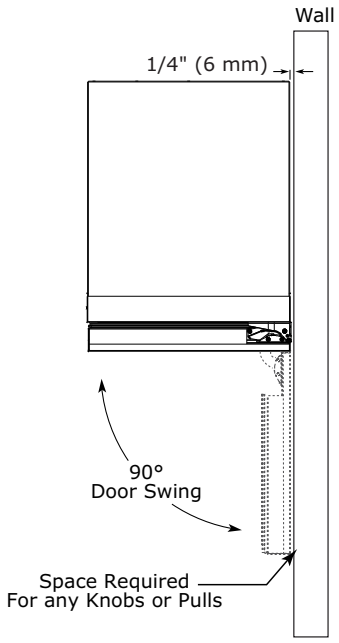

Integrated

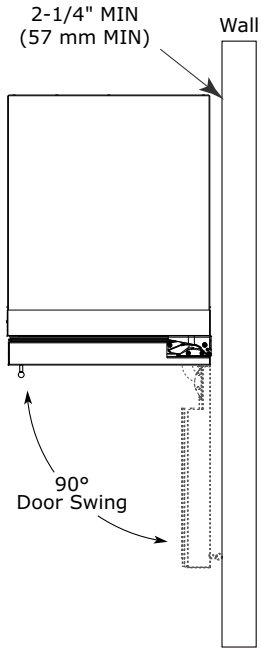

Stainless

Door Stop

Your U-Line unit was shipped to you with the optional 90° pin.

Your unit's door(s) will open 115° straight from the factory. If you would like the door stop at 90° follow these instructions.

NOTICE

If your unit is already undercounter, it will need to be moved out to access the hinge. With the 90° stop pin in place, you will not be able to replace the hinge cover.

1. Open door approximately 90°.

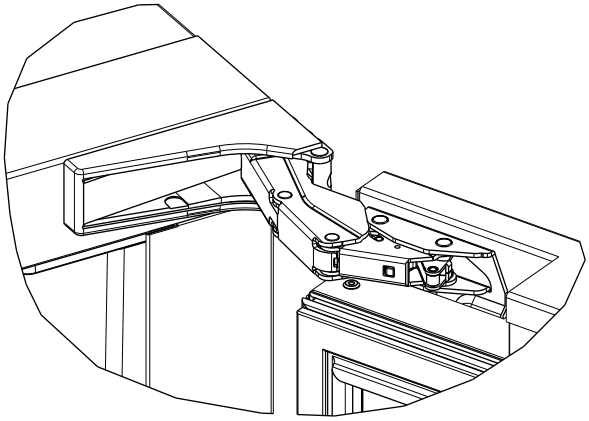

2. Remove hinge cover by lifting top and bottom of hinge cover and sliding the cover inwards to remove from hinge.

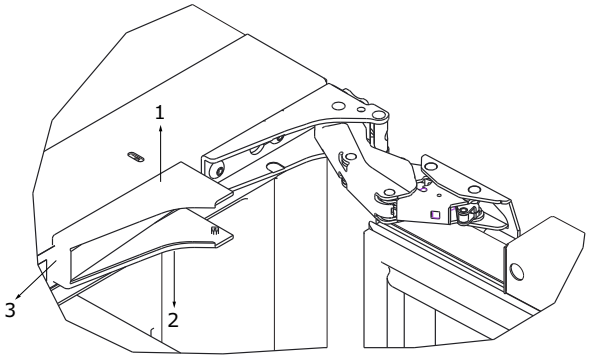

3. Once cover is removed, slide hinge pin into hole as shown. Pin should slide into place, stopping the door at 90°; if the pin does not go into the hole shown, hold the door less than 90° open and try again.

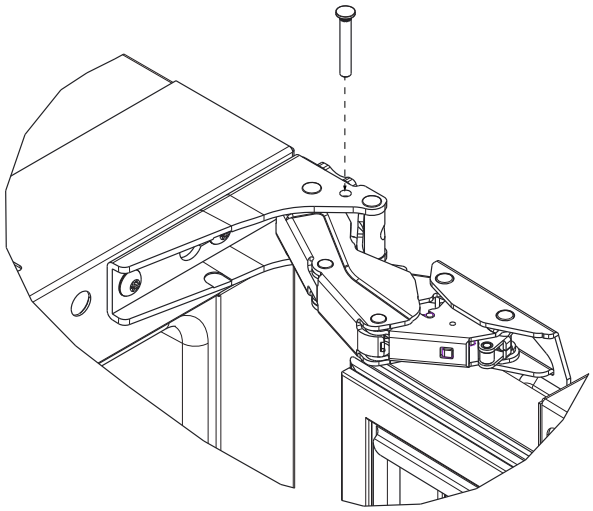

4. To fully seat the pin, tap it lightly with a hammer.

5. Carefully slide your unit back in place.

NOTICE

The pin can be removed to return the door swing back to its original 115° swing by tapping the pin out from the bottom of the hinge.

CLOSER

The door hinge has a self-closing feature that engages when the door is open approximately 6" (150 mm) (about 25°).

Door Adjustments

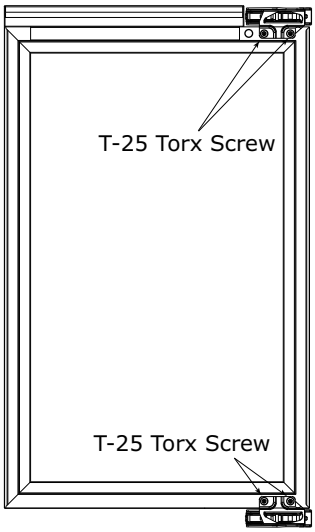

DOOR ALIGNMENT AND ADJUSTMENT

Align and adjust the door if it is not level or is not sealing properly. If the door is not sealed, the unit may not cool properly, or excessive frost or condensation may form in the interior.

NOTICE

Properly aligned, the door's gasket should be firmly in contact with the cabinet all the way around the door (no gaps). Carefully examine the door's gasket to ensure that it is firmly in contact with the cabinet. Also make sure the door gasket is not pinched on the hinge side of the door.

⚠ CAUTION

Do not attempt to use the door to raise or pivot your unit. This would put excessive stress on the hinge system.

Alignment and Adjustment Procedure

1. Remove integrated panel, if installed.
2. Using a T-25 Torx Bit, loosen each pair of Torx head screws on both the upper and lower hinge plates.
3. Square and align door as necessary.
4. Tighten Torx head screws on hinge.

Wood Trim Finishing

The wine rack fronts are solid natural beech wood. They are factory coated with a clear vinyl sealer, which will sufficiently protect the wood in normal use.

You may coat the trim with stain and/or a final finish to match surrounding cabinetry.

⚠ CAUTION

You MUST remove the wood trim from the unit for staining or finishing to prevent permanent damage to the inner liner of the unit. Allow stain or finish to dry thoroughly (at least 24 hours for each coat) following the product manufacturer's instructions before reinstallation. Not following this warning may cause the inner liner of the unit to have a permanent odor, which the warranty will not cover.

U-Line recommends Minwax® Brand Water Based Stains and Minwax Polycrylic® Protective Finish.

NOTICE

Never use oil based stains or finishes.

On glass door models, the stain may appear darker when viewed through the glass.

Follow the manufacturers instructions for the stain and/or finish you select.

First Use

All U-Line controls are preset at the factory. Initial startup requires no adjustments.

NOTICE

U-Line recommends allowing the unit to run overnight before loading with product.

When plugged in, the unit will begin operating under the factory default settings. If the unit was turned off during installation, simply press ⏻ and the unit will immediately switch on. To turn the unit off, press ⏻.

Control Operation

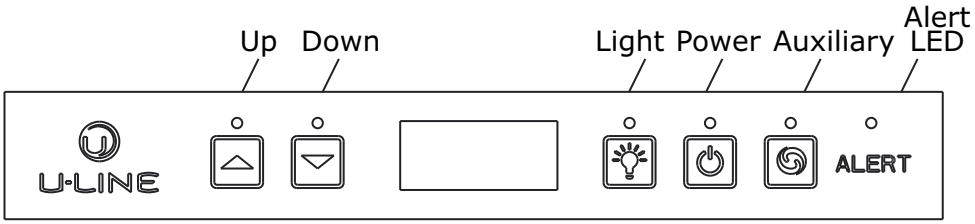

CONTROL FUNCTION GUIDE

FUNCTION	**COMMAND**	**DISPLAY/OPTIONS**
ON/OFF	Press ⏻ and release	Unit will immediately turn ON or OFF.
Toggle lights	Press 💡 and release	Leave interior light on for 3 hours.
Adjust temperature	Press ▲ or ▼ and release	The zone you are setting will have its light turned on (top zone first).
	Press ▲ or ▼ to adjust set point temperature	Display will show the set temperature.
	Press ◎ to change zones	Light will switch from top zone to the bottom zone.
	Press ▲ or ▼ to adjust set point temperature	Display will show the set temperature.
	Press ◎ to confirm and exit	
View temperature in unit	Press ▲ and ▼ together and release	The display will flash and then toggle from set point to temperature in unit. The temperature shown will correspond to the illuminated zone.
Toggle between F/C	Hold ▲ and ▼ for five seconds	The display will change units.

Sabbath Mode

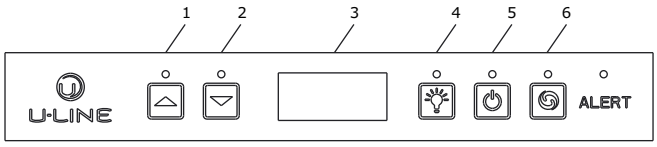

This unit is Star-K certified and offers a Sabbath mode. Sabbath mode disables system responses to user initiated activities and all external functions; including lighting, display and audible alarms. The unit will still maintain internal temperatures and set points. View a full list of Star-K certified U-Line units at www.star-k.org.

To enable Sabbath Mode.

1. Press (4) and hold for ten seconds and release (the °F/°C symbol will flash briefly at the end of the ten second period).

2. The interior light and control display (3) will go dark until user resets mode.

3. NOTE: Although the display will not be visible, the temperature controls in the unit remain active, and preserve the interior temperature.

Sabbath Mode remains active until (4) is quickly pressed and released.

Airflow and Product Loading

NOTICE

The unit requires proper airflow to perform at its highest efficiency. Do not block the front grille, or the unit will not perform as expected. Do not install the unit behind a door. When loading your unit, leave space between the evaporator and product loaded. Anything in direct contact with the evaporator is subject to freezing.

When properly loaded, your U-Line unit will store up to 43 (750 ml) bottles of wine.

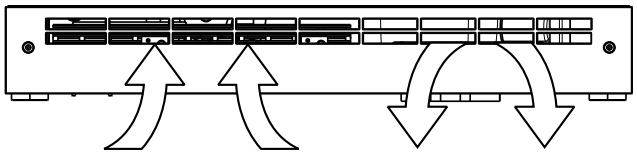

U-Line Wine Guide

LOOKING BEHIND THE LABEL

To most, wine is a delicious mystery. We purchase it, uncork it, and savor its taste and beauty. But there is so much more to true wine appreciation. Many secrets are simply too good to keep bottled up.

WINE SELECTIONS SUGGESTIONS

Selecting the right wine for the right occasion can sometimes be a seemingly awkward or difficult task for the beginning wine enthusiast. We would therefore like to present you with a few suggestions which may provide a little more confidence and enjoyment when choosing and serving your wines.

When selecting wines, keep an open mind and do not be afraid to be adventurous. Do not view the subject of wine so seriously it discourages you from learning and discovering for fear of embarrassment if something is incorrect. Wine is best viewed as a hobby and enjoyed.

When assembling your collection, try not to become obsessed with "Vintages." Although a chart can be a useful tool, generalizations about a specific year have led more than one collector to disappointment. Often an "Off Year" will provide a better value and more drinking enjoyment.

The primary guideline to the subject of wine is your own palate. Do not be afraid to make mistakes. Experiment, discover, but most of all, enjoy yourself and your new U-Line product.

Guide To Common Styles Of Wine

Red Wines		
Full-Bodied Dry	California French Italian	Zinfandel, Cabernet Rhone, Chateauneuf-du-Pape Barbaresco, Barolo
Medium-Bodied Dry	California French	Pinot Noir Bordeaux, Burgundy
Light-Bodied Dry	French Italian	Beaujolais Chianti, Bardolino
White Wines		
Full-Bodied Dry	California French	Chardonnay Montrachet, Meursault Puligny-Montrachet
Medium-Bodied Dry	California French	Sauvignon-Blanc Pouilly-Fuisse, Sancerre, Vouvray, Graves
Light-Bodied Dry	French	Chablis, Muscadet, Pouilly-Fume
Full-Bodied, Very Sweet	Germany French Hungary	Beerenauslese Sauternes Tokay
Medium-Bodied, Semi-Sweet	California Germany	Gewurtztraminer Liebfraumilch
Light-Bodied Off Dry	Germany	Rhine, Mosel, Riesling

Matching Food and Wine

Although there are no hard fast rules for matching wine to food, observe some guidelines. Delicate dishes should be accompanied by lighter more delicate wines. Full-flavored foods should be matched with fuller-bodied wines.

As a general rule, one should aim to ascend in flavor and quality of wines served.

Serve a:	Before a:
DRY wine	SWEET wine
WHITE wine	RED wine
YOUNG wine	OLD wine
LIGHT-BODIED wine	FULL-BODIED wine

Any step back in quality will be noticed. If a fine wine is tasted prior to a lesser wine, many of the fine wine's subtle qualities may be missed.

Common Food and Wine Matches

Foods	Wines
Fish, Shell Fish, Crab, Oysters	Dry White Wines, Light Sparkling or Extra Dry Champagne
Beef, Venison	Full-Bodied Red Wines
Pork, Veal, Lamb and Poultry	Light-Bodied Red Wines
Fruit	Sweet White and Sparkling Wines

A Toast to Wine Truths

Like the grapes themselves, many wine myths have been cultivated over the centuries.

Myth 1: Most wines taste better when aged.

Truth: In fact, less than 5% of wines produced today are meant to be aged. Most wines are crafted to be consumed within the first one to two years.

Myth 2: Wines should be uncorked and decanted allowing them to "breathe."

Truth: To breathe or not breathe? While it is better to allow a young tannic Red to breathe in a glass or decanter to soften the tannins, an old Red reaches a stage in its life where it should be enjoyed soon after opening. Allow an old Red to breathe for a short time to dissipate any off odors. Most white wines can be served, ideally, 10-15 minutes after opening.

Myth 3: When age worthy wines peak, they must be consumed almost immediately.

Truth: Most great wines reach a plateau period rather than a peak. Great Bordeaux's may have as much as a 10-year plateau before fading.

Myth 4: Wine color does not change with aging.

Truth: As red wines age they get lighter in color while whites get darker.

The Cork: A Mystery on Its Own

Cork Presentation. The ritual of the presentation of the cork has a rich and fascinating history dating back to the late 1800's. A phylloxera (root louse) devastation to the vineyards severely limited the supply of great wines. Restaurateurs would remove labels on inferior wines and replace them with labels from superior wines. This made it necessary for patrons to protect themselves by checking the branding on the cork to ensure that what they ordered was, in fact, what they were served.

When presented with a cork today, feel it to check for its integrity, read and match the branding on the cork to the bottle and set it aside. There is little to be learned from the cork. The proof is in the wine.

"Corked" wines. If you've ever had a wine that smelled or tasted of mold, you've experienced a wine that may have been "corked." Today, between five and eight percent of wines are tainted with Trichloroanisole (TCA). This substance, found naturally in plants and trees, is imparted to the wine through the cork. Corked wines are a major concern for winemakers as it destroys millions of cases per year and puts reputations at stake. Amazing as it may seem twist-off caps may offer a better alternative and many great wineries in California, Australia and New Zealand are pioneering the trend.

Common Tasting Terms

Terminology	Description
Acidity	A critical element of wine that is responsible for preserving the wines freshness. Excess acidity results in an overly tart and sour wine.
Balance	A desired trait where tannin, fruit and acidity are in total harmony. Wines with good balance tend to age gracefully.
Body	The weight and presence of wine in the mouth provided by the alcohol and tannin level. Full-bodied wines tend to have this strong concentration.
Bouquet	The blending of a wine's aroma within the bottle over a period of time, caused by volatile acidity.
Complex	A subjective term often used in tasting. A wine is said to be complex if it offers a variety of flavors and scents that continue to evolve as it develops.
Flabby	A wine that lacks structure, or is heavy to the taste, lacks acidity.
Full-Bodied	Wine high in alcohol and extract, generally speaking, fills the mouth, powerful.
Lean	Generally describes wines that are slim, lacking of generosity or thin.
Oaky	A desirable flavor imparted to wine if done in moderation. Most wines are aged in oak barrels one to three years, thereby receiving this toasty oak characteristic. However, if a weak wine is left in contact too long with an oak barrel it will tend to be overpowered with an oaky taste.
Tannin	Tannins are extracted from the grape skins and stems and are necessary for a well-balanced red wine. Tannins are easily identified in wine tasting as the drying sensation over the gums. Tannins generally fade as a wine ages.

IDEAL WINE STORAGE CONSIDERATIONS

Temperature: The most important element about storage temperature is stability. If wine is kept in a stable environment between 40°F (7°C) and 65°F (21°C), it will remain sound. A small 1-2 degree temperature fluctuation within a stable environment is acceptable. Larger temperature fluctuations can affect the corks ability to seal, allowing the wine to "leak" from the bottle.

Humidity: The traditional view on humidity maintains that wines should be stored on their sides in 50% - 80% relative humidity to ensure cork moisture and proper fit in the bottle. Contemporary wisdom suggests that the cork surface is too small to be impacted by humidity. Further the cork is sealed with a metal or wax capsule making humidity penetration impossible. The concept of a humid storage environment was derived from the necessity of wineries to maintain moisture in their cellars to keep wooden barrel staves swollen, preventing wine evaporation and product loss. In fact, vineyards estimate as much as a 10% product loss per year due to evaporation while wine is aging in the wooden barrels. Humidity, however, was not intended for the modern home cellar where wine is stored in glass bottles with sealed corks.

Light: UV rays are not only harmful to people, they are damaging to wines - especially those in clear bottles. Since oxygen molecules in wine absorb UV rays, wine should never be stored in direct light for long periods of time.

Vibration: Provided that sediment is left undistributed and particles are not suspended, vibration in a storage environment is not an issue. Wines can become flat or tired when voids and vacuums are created inside the wine bottle. In order to create voids and vacuums within a liquid, aggressive motion or shaking of the wine bottle would have to occur.

The Right Temperature for Wine

Temperature	Wines
Approximately 60°F (15°C)	Red
50°F - 55°F (10°C -12°C)	White
Approximately 45°F (7°C)	Sparkling

Wine Captain® Models - A Touch of Elegance

In 1985 U-Line was the first North American appliance manufacturer to develop a residential wine storage unit, the Wine Captain®. Each U-Line Wine Captain® model is designed to impress and inspire anyone with an interest in wine by providing cellar conditions in stylish, undercounter units. U-Line Wine Captain® models offer stable storage temperatures, a 50% internal relative humidity and protection from UV light rays. U-Line has the largest product offering available, making storing, presenting, and sharing your wine effortless and elegant.

Recommended Wine Storage

Specially designed horizontal wine racks properly position the bottles so the wine remains in contact with the cork, which ensures the cork does not become dry.

U-Line recommends arranging wine bottles as shown in the illustrations below.

Racks 1 through 5:

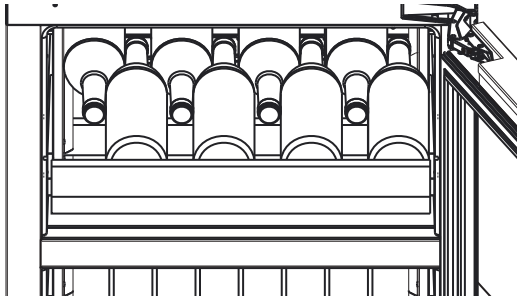

Rack 6:

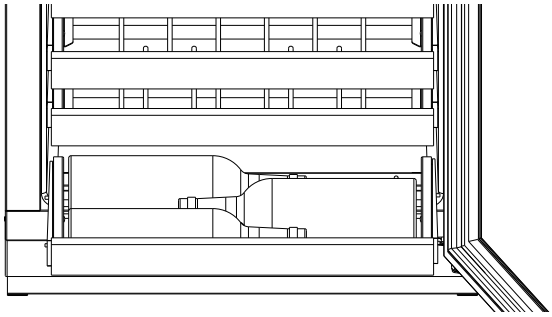

Larger diameter bottles may be stored on the shaded racks, illustrated below.

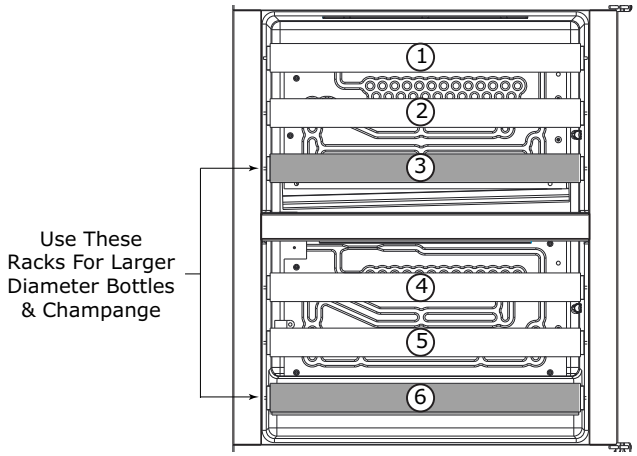

NOTE: After stocking, allow unit to stabilize product temperatures for 24 hours.

Cleaning

EXTERIOR CLEANING

Stainless Models

Stainless door panels, handles and frames can discolor when exposed to chlorine gas, pool chemicals, saltwater or cleaners with bleach.

Keep your stainless unit looking new by cleaning with a good quality all-in-one stainless steel cleaner and polish monthly. For best results use Claire® Stainless Steel Polish and Cleaner, which can be purchased from U-Line Corporation (Part Number 173348). Comparable products are acceptable. Frequent cleaning will remove surface contamination that could lead to rust. Some installations may require cleaning weekly.

Do not clean with steel wool pads.

Do not use stainless steel cleaners or polishes on any glass surfaces.

Clean any glass surfaces with a non-chlorine glass cleaner.

Do not use cleaners not specifically intended for stainless steel on stainless surfaces (this includes glass, tile and counter cleaners).

If any surface discoloring or rusting appears, clean it quickly with Bon-Ami® or Barkeepers Friend Cleanser® and a nonabrasive cloth. Always clean with the grain. Always finish with Claire Stainless Steel Polish and Cleaner or comparable product to prevent further problems.

Using abrasive pads such as ScotchBrite™ will cause the graining in the stainless steel to become blurred.

Rust not cleaned up promptly can penetrate the surface of the stainless steel and complete removal of the rust may not be possible.

Integrated Models

To clean integrated panels, use household cleaner per the cabinet manufacturer's recommendations.

INTERIOR CLEANING

Disconnect power to the unit.

Clean the interior and all removed components using a mild nonabrasive detergent and warm water solution applied with a soft sponge or non-abrasive cloth.

Rinse the interior using a soft sponge and clean water.

Do not use any solvent-based or abrasive cleaners. These types of cleaners may transfer taste to the interior products and damage or discolor the interior.

DEFROSTING

Under normal conditions this unit does not require manual defrosting. Minor frost on the rear wall or visible through the evaporator plate vents is normal and will melt during each off cycle.

If there is excessive build-up of 1/4" (6 mm) or more, manually defrost the unit.

Ensure the door is closing and sealing properly.

High ambient temperature and excessive humidity can also produce frost.

⚠ CAUTION

DO NOT use an ice pick or other sharp instrument to help speed up defrosting. These instruments can puncture the inner lining or damage the cooling unit. DO NOT use any type of heater to defrost. Using a heater to speed up defrosting can cause personal injury and damage to the inner lining.

NOTICE

The drain pan was not designed to capture the water created when manually defrosting. To prevent water from overflowing the drain pan, and possibly damaging water sensitive flooring, the unit must be removed from cabinetry.

To defrost:

1. Disconnect power to the unit.
2. Remove all products from the interior.
3. Prop the door in an open position (2 in. [50 mm] minimum).
4. Allow the frost to melt naturally.
5. After the frost melts completely clean the interior and all removed components. (See INTERIOR CLEANING).
6. When the interior is dry, reconnect power and turn unit on.

Cleaning Condenser

INTERVAL - EVERY SIX MONTHS

To maintain operational efficiency, keep the front grille (plinth strip/base fascia) free of dust and lint, and clean the condenser when necessary. Depending on environmental conditions, more or less frequent cleaning may be necessary.

⚠ WARNING

Disconnect electric current to the unit before cleaning the condenser.

NOTICE

DO NOT use any type of cleaner on the condenser unit. Condenser may be cleaned using a vacuum, soft brush or compressed air.

1. Remove the grille (plinth strip/base fascia). (See GRILLE-PLINTH INSTALLATION).

2. Clean the condenser coil using a soft brush or vacuum cleaner.

3. Install the grille (plinth strip/base fascia).

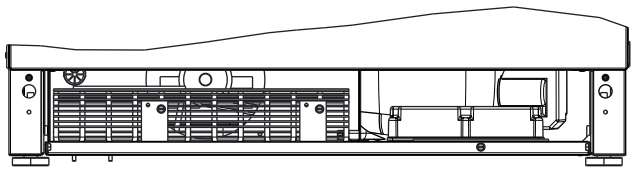

Wine Rack Installation

To remove wine racks for cleaning:

1. Remove any bottles stored on the rack.

2. Grasp the end of the rack and gently slide it out until it stops.

3. The release levers are located on the inside of the rack rails. Press the left rack release lever down. At the same time, lift the matching right rack release lever up. Pull the rack out until it is free of the tracks and the cabinet.

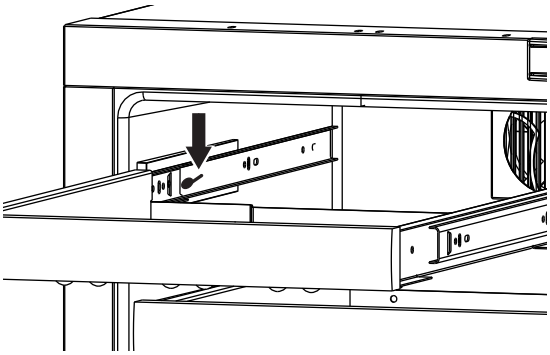

NOTICE

Do not remove the track rails from the cabinet.

To insert wine racks in the cabinet:

1. Align the left and right rack channels with the tracks in the cabinet. Ensure an even track engagement on both sides by gently pushing the rack into the cabinet until it stops.

2. Before reloading the rack, ensure proper movement of the travel stops in the left and right track rails by pulling the rack out gently until it stops.

To clean wine racks:

1. Saturate a soft cloth with a soapy, warm water solution.

2. Wring excess water from cloth and wipe racks down.

NOTICE

The wine racks are greased. This white lithium grease helps provide smooth operation of the slide mechanism. It is important not to remove grease.

Extended Non-Use

VACATION/HOLIDAY, PROLONGED SHUTDOWN

The following steps are recommended for periods of extended non-use:

1. Remove all consumable content from the unit.

2. Disconnect the power cord from its outlet/socket and leave it disconnected until the unit is returned to service.

3. If ice is on the evaporator, allow ice to thaw naturally.

4. Clean and dry the interior of the unit. Ensure all water has been removed from the unit.

5. The door must remain open to prevent formation of mold and mildew. Open door a minimum of 2" (50 mm) to provide the necessary ventilation.

WINTERIZATION

If the unit will be exposed to temperatures of 40°F (5°C) or less, the steps above must be followed.

For questions regarding winterization, please call U-Line at +1.800.779.2547.

⚠ CAUTION

Damage caused by freezing temperatures is not covered by the warranty.

Accessories

23054-01

Accessories - Stainless Steel
PRO Style Door Handle,
1-1/4" in diameter
US$49.00

Troubleshooting

BEFORE CALLING FOR SERVICE

If you think your U-Line product is malfunctioning, read the CONTROL OPERATION section to clearly understand the function of the control.

If the problem persists, read the NORMAL OPERATING SOUNDS and TROUBLESHOOTING GUIDE sections below to help you quickly identify common problems and possible causes and remedies. Most often, this will resolve the problem without the need to call for service.

IF SERVICE IS REQUIRED

If you do not understand a troubleshooting remedy, or your product needs service, contact U-Line Corporation directly at +1.800.779.2547.

When you call, you will need your product Model and Serial Numbers. This information appears on the Model and Serial number plate located on the upper right or rear wall of the interior of your product.

NORMAL OPERATING SOUNDS

All models incorporate rigid foam insulated cabinets to provide high thermal efficiency and maximum sound reduction for its internal working components. Despite this technology, your model may make sounds that are unfamiliar.

Normal operating sounds may be more noticeable because of the unit's environment. Hard surfaces such as cabinets, wood, vinyl or tiled floors and paneled walls have a tendency to reflect normal appliance operating noises.

Listed below are common refrigeration components with a brief description of the normal operating sounds they make. NOTE: Your product may not contain all the components listed.

- Compressor: The compressor makes a hum or pulsing sound that may be heard when it operates.
- Evaporator: Refrigerant flowing through an evaporator may sound like boiling liquid.
- Condenser Fan: Air moving through a condenser may be heard.
- Automatic Defrost Drain Pan: Water may be heard dripping or running into the drain pan when the unit is in the defrost cycle.

TROUBLESHOOTING GUIDE

⚠ DANGER

ELECTROCUTION HAZARD. Never attempt to repair or perform maintenance on the unit before disconnecting the main electrical power.

Troubleshooting - What to check when problems occur:

Problem	Possible Cause and Remedy
Digital Display and Light Do Not Work.	Ensure power is connected to the unit. If the unit is cooling, it may be in Sabbath mode.
Interior Light Does Not Illuminate.	The light bulb may be defective. If the unit is cooling, it may be in Sabbath mode.
Light Remains on When Door Is Closed.	For glass door models, press the light icon and close the door. Check reed switch.
Unit Develops Frost on Internal Surfaces.	Frost on the rear wall is normal and will melt during each off cycle. If there is excessive build-up of 1/4" or more, manually defrost the unit. Ensure the door is closing and sealing properly. High ambient temperature and excessive humidity can also produce frost.
Unit Develops Condensation on External Surfaces.	The unit is exposed to excessive humidity. Moisture will dissipate as humidity levels decrease.
Digital Display Functions, But Unit Does Not Cool.	Ensure the unit is not in "Showroom Mode." Momentarily unplug or interrupt power supply to the unit.
Digital Display Shows ER or E Followed by a Number.	E3 indicates the door may be opened too long. Ensure the door is closing properly. For other error codes contact U-Line Customer Service.

Problem	Possible Cause and Remedy
Digital Display Shows 1-16 or 99	A factory test mode may be enabled. Adjust the temperature to 99 and press the LIGHT icon.
Product Is Freezing.	Because product in contact with the rear wall may freeze, ensure no product is touching the rear wall. Adjust the temperature to a warmer set point.
Product Is Not Cold Enough.	Air temperature does not indicate product temperature. See CHECKING PRODUCT TEMPERATURE below. Adjust the temperature to a cooler set point. Ensure unit is not located in excessive ambient temperatures or in direct sunlight. Ensure the door is closing and sealing properly. Ensure the interior light has not remained on too long. Ensure nothing is blocking the front grille, found at the bottom of the unit. Ensure the condenser coil is clean and free of any dirt or lint build-up.

CHECKING PRODUCT TEMPERATURE

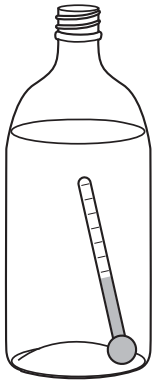

To check the actual product temperature in the unit:

1. Partially fill a plastic (nonbreakable) bottle with water.
2. Insert an accurate thermometer.
3. Tighten the bottle cap securely.
4. Place the bottle in the desired area for 24 hours.
5. Avoid opening the unit during the testing period.
6. After 24 hours, check the temperature of the water. If required, adjust the temperature control in a small increment (see CONTROL OPERATION).

Causes which affect the internal temperatures of the cabinet include:

- Temperature setting.
- Ambient temperature where installed.
- Installation in direct sunlight or near a heat source.
- The number of door openings and the time the door is open.
- The time the internal light is illuminated. (This mainly affects product on the top rack or shelf.)

Warranty

U-LINE CORPORATION LIMITED WARRANTY

1. U-Line Corporation ("U-Line") warrants each U-Line product to be free from defects in materials and workmanship for a period of one year (two years on Modular 3000 Series) from the date of purchase. U-Line further warrants the sealed system (consisting of the compressor, condenser, evaporator, hot gas bypass valve, dryer, and connecting tube) in each U-Line product to be free from defects in materials and workmanship for a period of five years from the date of purchase.

2. During the initial one year warranty period (two years on Modular 3000 Series) for all U-Line products U-Line shall: (1) repair any product or replace any part of a product; and (2) for all Marine, RV and Domestic U-Line products sold and serviced in the United States (including Alaska and Hawaii) and Canada, U-Line shall be responsible for the labor costs performed by a U-Line authorized service company, incurred in connection with the replacement of any defective part. During years two through five of the warranty period for the sealed system, U-Line shall: (1) at U-Line's option repair or replace any part of the sealed system; and (2) for all Marine, RV and Domestic U-Line products sold and serviced in the United States (including Alaska and Hawaii) and Canada, U-Line shall be responsible for the labor costs incurred in connection with the replacement of any defective part of the sealed system. All other charges, including transportation charges for replacements under this warranty and labor costs not specifically covered by this warranty, shall be the responsibility of the purchaser. This warranty extends only to the original purchaser of the U-Line product. The Product Registration Card included with the product should be promptly completed by you and mailed back to U-Line or you can register on-line at www.u-lineservice.com.

3. The warranty listed above does not apply to floor display models. The warranty for these models shall be 30 days from the date of retail purchase and only if U-Line's Product Registration Card included with the unit is completed and mailed back or electronically submitted to U-Line. This 30 day warranty does not apply to cosmetic damages. A proof of purchase may be required.

4. The following conditions are excluded from this limited warranty: use of cleaners other than the recommended stainless steel cleaners and U-Line Clear Ice Maker cleaner; installation charges; damages caused by disasters or acts of God, such as fire, floods, wind and lightning; damages incurred or resulting from shipping, improper installation, unauthorized modification, or misuse/abuse of the product; customer education calls; food loss and spoilage; door and water level adjustments (except during the first 30 days from the date of installation); defrosting the product; adjusting the controls; door reversal; and cleaning the condenser.

5. U-Line product are designed to operate in ambient temperatures between 50°F and 100°F unless otherwise noted in the product manual. Exposure to temperatures outside this range may cause degradation of performance and issue such as lower ice production or spoiled contents are not covered under the terms of this warranty as a result of that exposure. U-Line product may not be subjected to temperatures below 40F without following the winterization and vacation shutdown procedures in the user guide.

6. U-Line's Outdoor Limited Warranty, set forth in this Paragraph 6 shall apply to U-Line models deemed suitable for outdoor use by Underwriters Laboratory ("UL") as noted in the U-Line Product Catalog, U-Line's website and/or on the serial tag located inside the product.

   A. Outdoor product may come into contact with rain by virtue of outdoor use. Exposure to other sources of water shall also cause this warranty to be void, including flooding of the area in proximity of the unit greater than 1/8" deep in water, hurricanes, splashing of pool water, or directing a spray from a hose or similar device into and around the unit.

7. If a product defect is discovered during the applicable warranty period, you must promptly notify either U-Line at 8900 N. 55th Street, Milwaukee, Wisconsin 53223 USA or at +1.800.779.2547 or the dealer from whom you purchased the product. In no event shall such notification be received later than 30 days after the expiration of the applicable warranty period. U-Line may require that defective parts be returned, at your expense, to U-Line's factory in Milwaukee, Wisconsin, for inspection. Any action by you for breach of warranty must be commenced within one year after the applicable warranty period.

8. THIS LIMITED WARRANTY IS IN LIEU OF ANY AND ALL OTHER WARRANTIES, EXPRESS OR IMPLIED, INCLUDING ANY IMPLIED WARRANTY OF MERCHANTABILITY OR IMPLIED WARRANTY OF FITNESS FOR A PARTICULAR PURPOSE, ALL OF WHICH ARE DISCLAIMED. U-Line's sole liability and your exclusive remedy under this warranty is set forth in the paragraphs above. U-Line shall have no liability whatsoever for any incidental, consequential or special damages arising from the sale, use or installation of the product or from any other cause whatsoever, whether based on warranty (express or implied) or otherwise based on contract, tort or any other theory of liability.

Some states do not allow limitations on how long an implied warranty lasts or the exclusion or limitation of incidental or consequential damages, so the above limitations may not apply to you. This warranty gives you specific legal rights, and you may also have other rights which vary from state to state.

Warranty 6/2014 Rev.G