PGS920SEF

GE Profile™ Series 30" Slide-In Gas Range with Warming Drawer

Dimensions and Installation Information (in inches)

Note: Door handle protrudes 3" from door face. Cabinets and drawers on adjacent 45° and 90° walls should be placed to avoid interference with the handle.

Note: Cabinets installed adjacent to slide-in ranges must have an adhesion spec of at least 194° temperature rating.

Installation Information: Before installing, consult installation instructions packed with product for current dimensional data.

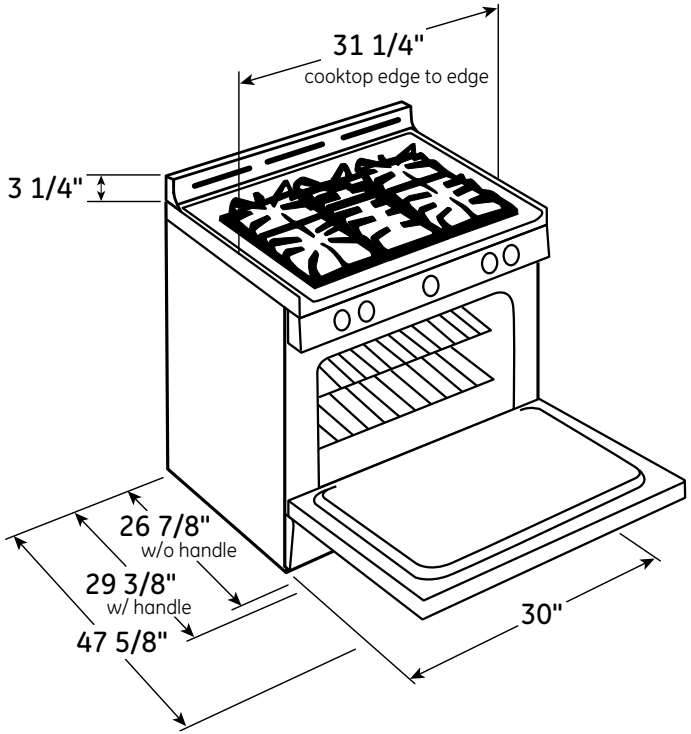

GAS PIPE AND ELECTRICAL OUTLET LOCATIONS

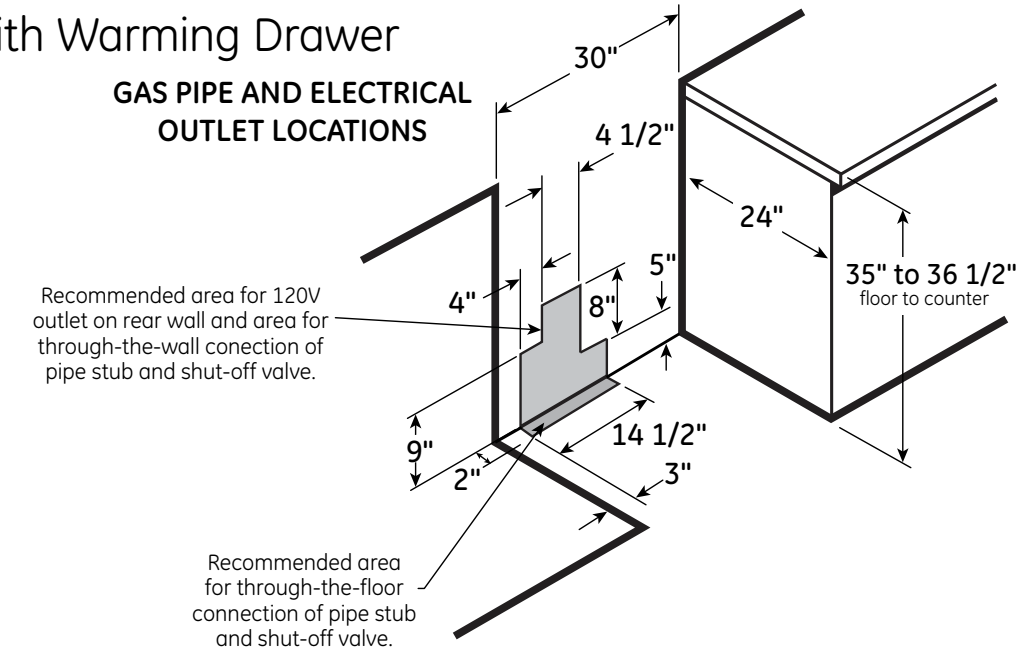

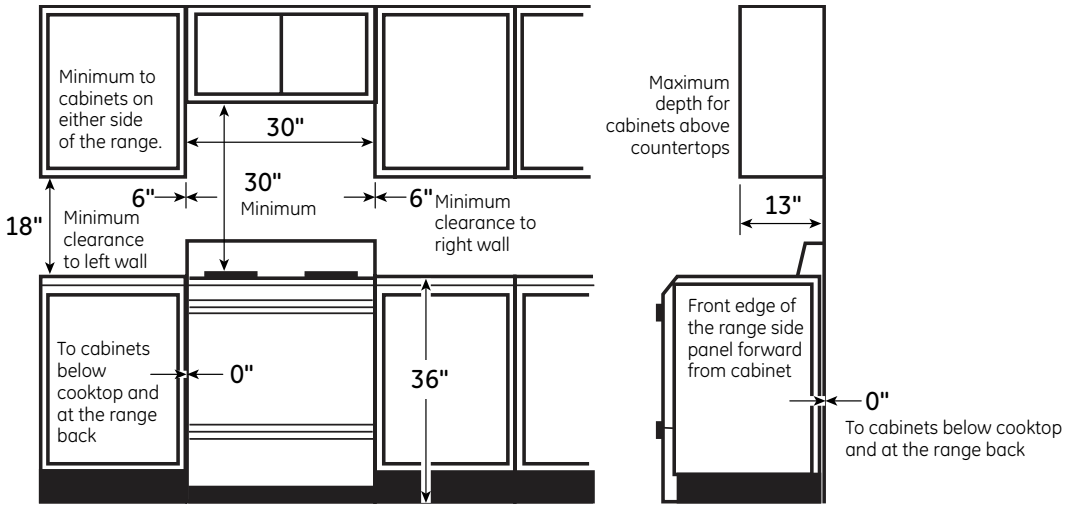

ADA compliant

*ADA qualified based on Uniform Federal Accessibility Standards

All GE ranges are equipped with an Anti-Tip device. The installation of this device is an important, required step in the installation of the range.

imagination at work

For answers to your Monogram® or GE® appliance questions, visit our website at geappliances.com or call GE Answer Center® service, 800.626.2000.

Specification Revised 8/13

230126

PGS920SEF

GE Profile™ Series 30" Slide-In Gas Range with Warming Drawer

Features and Benefits

- 20,000 BTU Tri-Ring Burner - Offers the flexibility of three different burners
- Center Oval Burner - Large oval fifth burner is ideal for griddle or odd-size cookware
- Reversible Cast-Iron Griddle/Grill - Two great ways to cook
- Stainless Steel, Deep Recessed Cooktop - Contains spills for quick and easy cleaning
- Self-Clean Heavy-Duty Roller Rack - Easily access items with a rack that glides smoothly
- Precise Simmer Burner - Delicate foods don't burn with low, even heat
- Gas Convection Oven - Circulates heat for high-quality results
- Model PGS920SEFSS - Stainless steel

imagination at work

Specification Revised 8/13 230126