Writing Desks

Capri

Shown in
Br. Maple
OCS-120

Hardware
530142-SN Knob
4656-SN Pull

1721

1720 48”W x 24”D x 30¼”H ***2 drawer***
1721 60”W x 24”D x 30¼”H ***Shown***

Capri

Shown in
Rustic Cherry
OCS-134

Hardware
530142-SN Knob
4656-SN Pull

1725

1724 48”W x 24”D x 30¼”H ***2 drawer*** Comes with one file drawer on left
1725 60”W x 24”D x 30¼”H ***Shown***

All Desks Have Finished Backs

Denali

Shown in
Br. Maple
OCS-132

Hardware
K4618-SN Knob
K773-SN Pull

1730

1730 48”W x 24”D x 30¼”H ***Shown***
1731 60”W x 24”D x 30¼”H ***2 side shelves***

Denali

Shown in
R.Q.S.W.O.
OCS-133

Hardware
K4618-SN Knob
K773-SN Pull

1735

1734

1734 48”W x 24”D x 30¼”H ***2 drawer***
1735 60”W x 24”D x 30¼”H ***Shown***

All Desks Available With
Optional Laptop Drawer
No Upcharge

Lindon
Queen Anne

Shown in
Cherry
OCS-106

Hardware
876-AE Pull

1711

1710 48”W x 24”D x 29¼”H ***2 drawer***
1711 60”W x 24”D x 29¼”H ***Shown***

A-Shelf

13½” Shelf Height

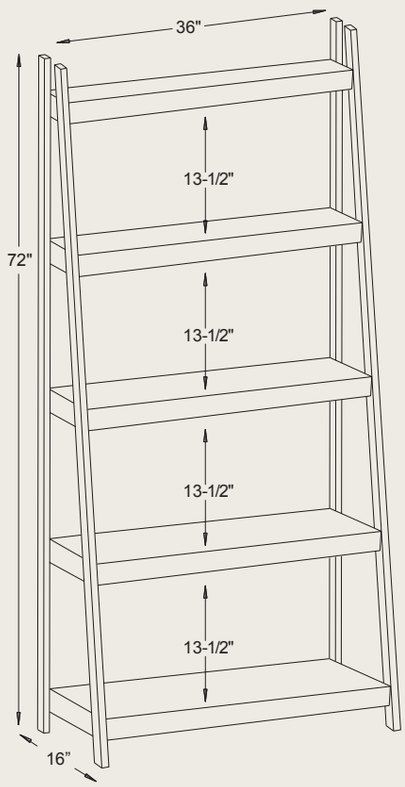

A-Shelf

Shown in
R.Q.S.W.O.
OCS-133

18-3085 36”W x 16”D x 72”H