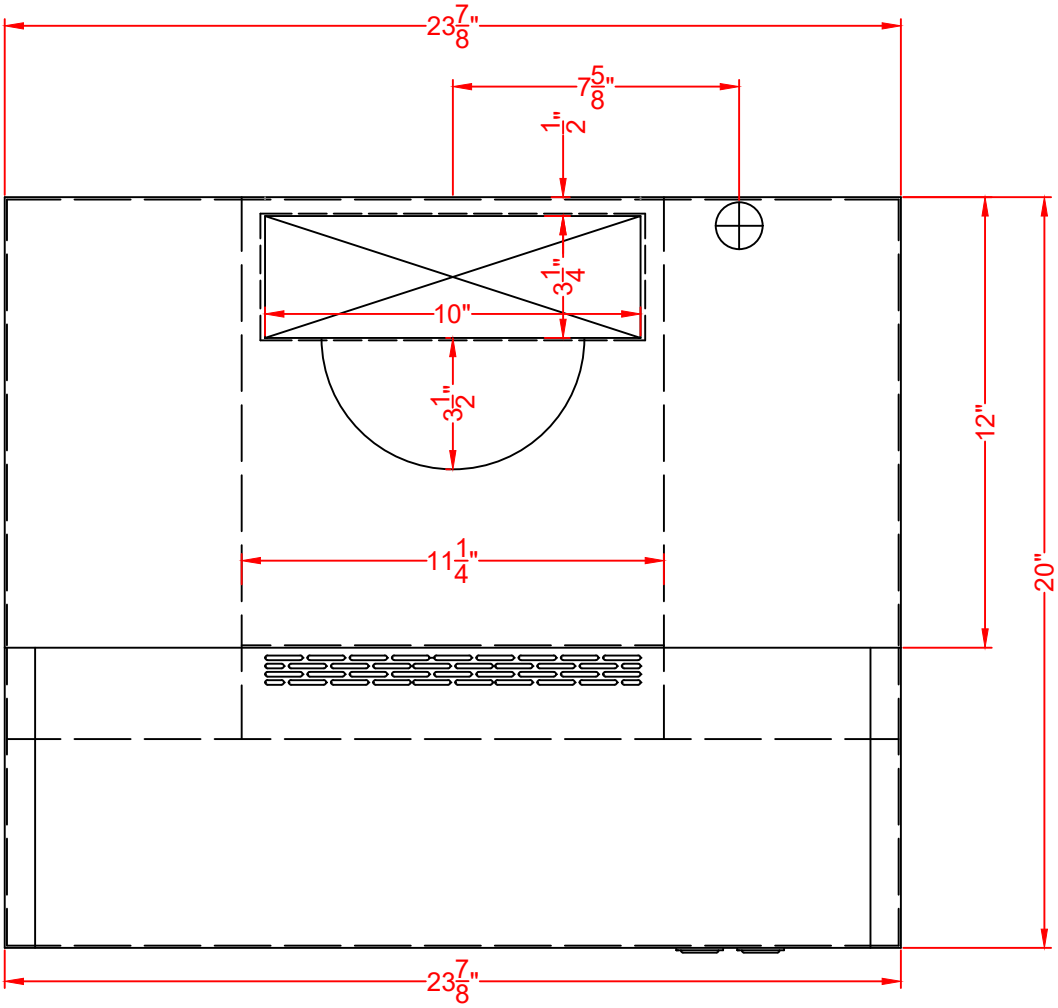

TOP VIEW

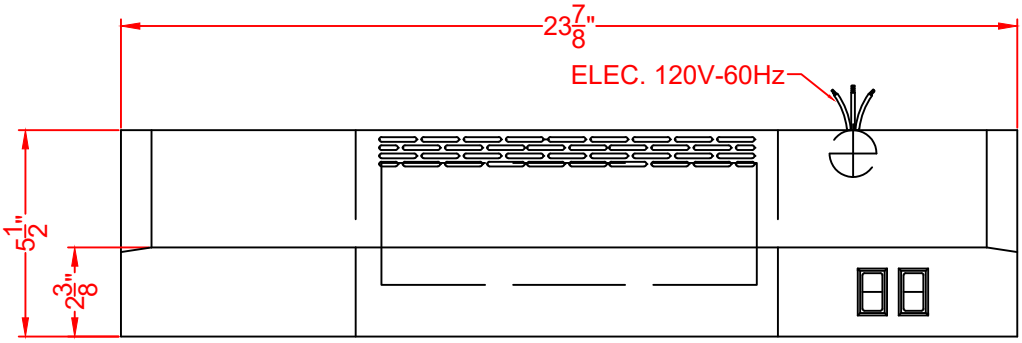

FRONT VIEW

HC24 Series

Range Hood

08/21/23

SUMMIT
FELIX STORCH, INC.
www.summitappliance.com
718-893-3900