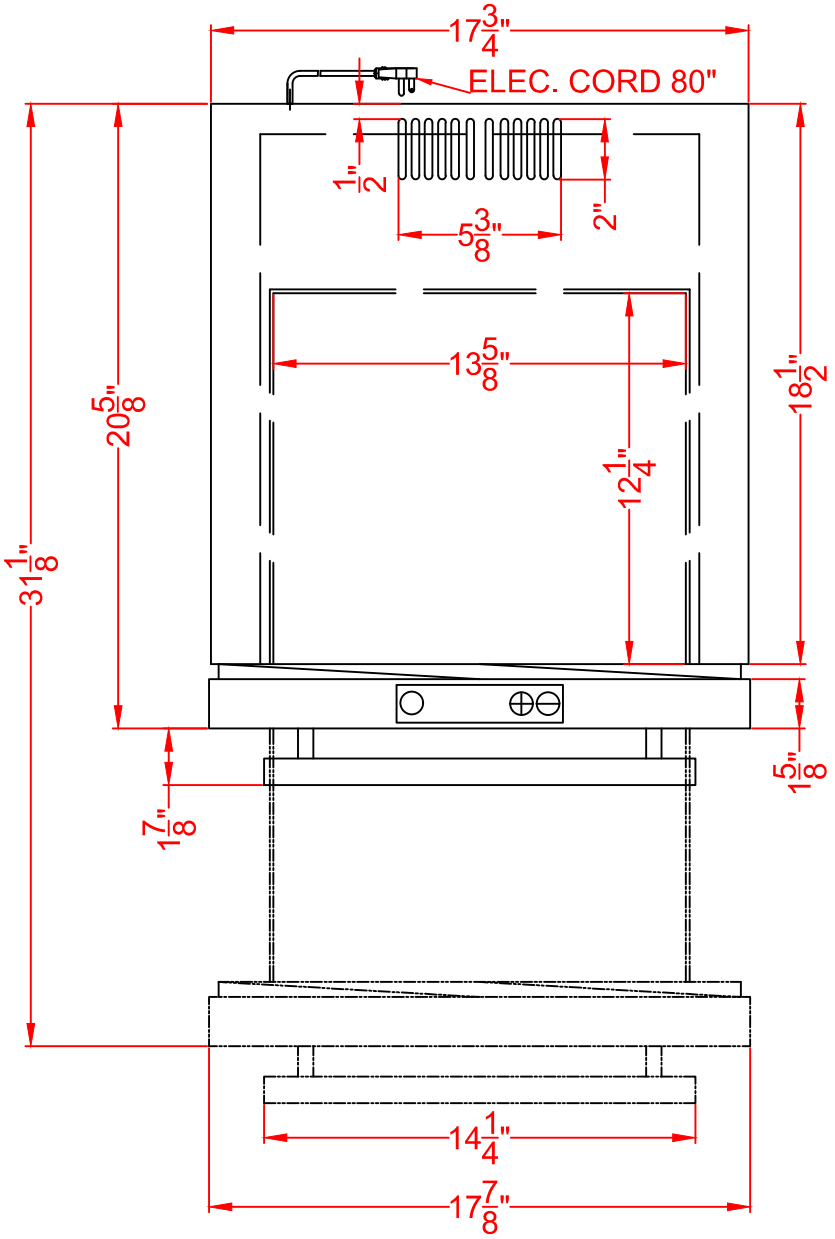

TOP

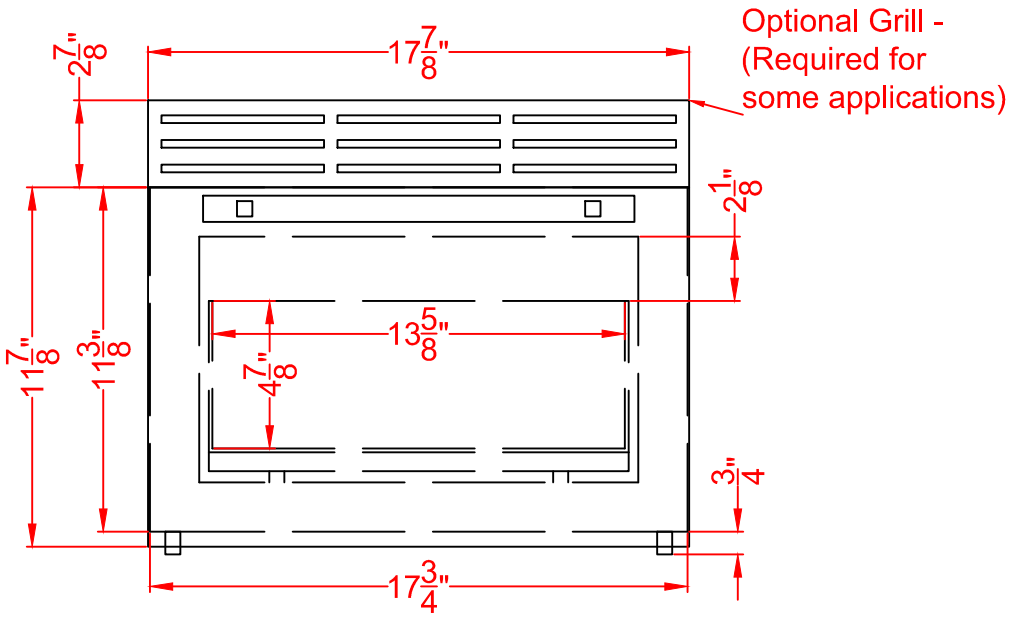

FRONT

COOL1D

Drawer-Refrigerator

03/08/23

SUMMIT
FELIX STORCH, INC.
www.summitappliance.com
718-893-3900