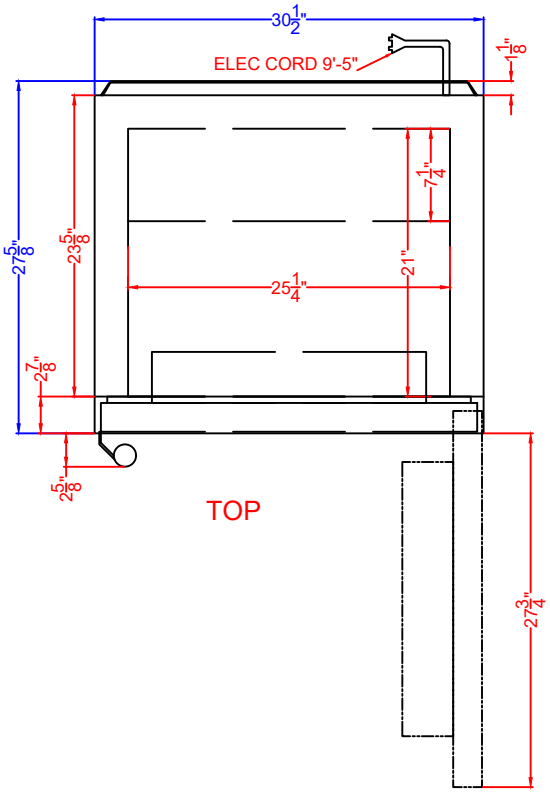

TOP

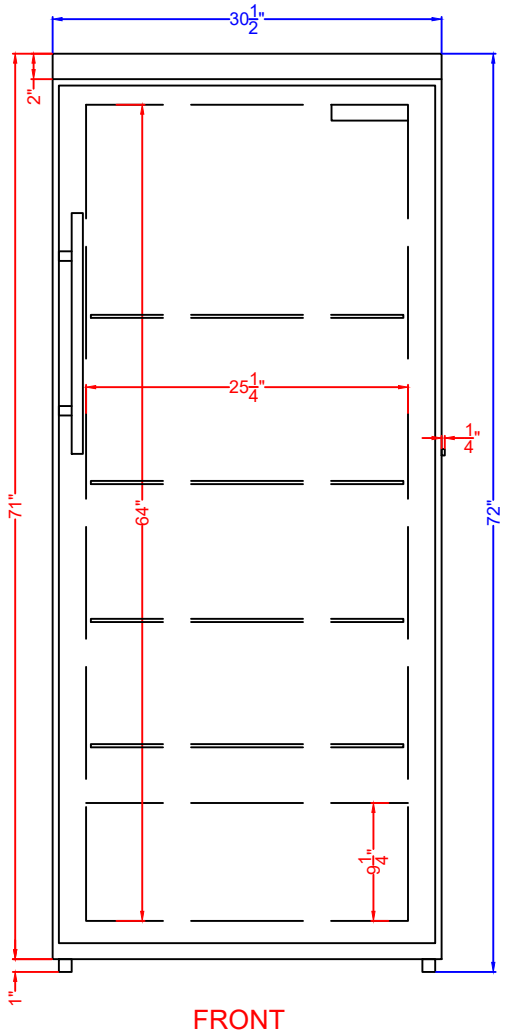

FRONT

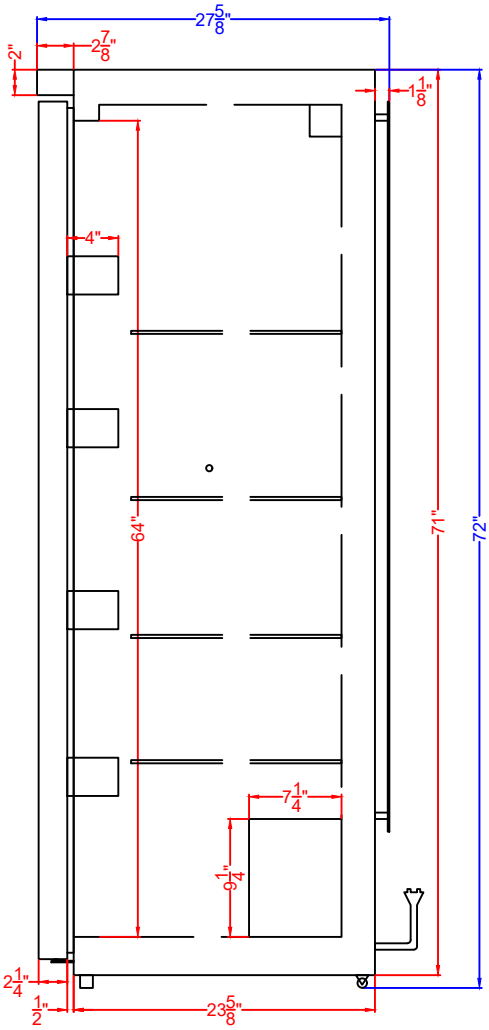

PROFILE

URM19W

ARM19W

Refrigerator

03/15/24

accucold.

FELIX STORCH, INC.

www.accucold.com

718-893-3900