FRIGIDAIRE

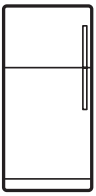

Refrigerator

use & care

Introduction....2
Important Safety Information....3
Features....5
Installation....6
Door Removal/Reversal Instructions....7
Controls and Settings....10
Storage Features....11
Care and Cleaning....12
Troubleshooting....13
Limited Warranty....14

A13290804 (June 2025)

Welcome to our **family**

Thank you for bringing Frigidaire into your home! We see your purchase as the beginning of a long relationship together.

This manual is your resource for the use and care of your product. Please read it before using your appliance. Keep it handy for quick reference. If something doesn't seem right, the troubleshooting section will help you with common issues.

FAQs, helpful tips and videos, cleaning products, and kitchen and home accessories are available at Frigidaire.com.

We are here for you! Visit our website, chat with an agent, or call us if you need help. We may be able to help you avoid a service visit. If you do need service, we can get that started for you.

Let's make it official! Be sure to register your product.

Keep your product info here so it's easy to find.

Model Number _____

Serial Number _____

Purchase Date _____

WARNING

Please read all instructions before using this refrigerator.

Definitions

This is the safety alert symbol. It is used to alert you to potential personal injury hazards. Obey all safety messages that follow this symbol to avoid possible injury or death.

DANGER

DANGER indicates an imminently hazardous situation which, if not avoided, will result in death or serious injury.

WARNING

WARNING indicates a potentially hazardous situation which, if not avoided, could result in death or serious injury.

CAUTION

CAUTION indicates a potentially hazardous situation which, if not avoided, may result in minor or moderate injury.

IMPORTANT

IMPORTANT indicates installation, operation or maintenance information which is important but not hazard-related.

DANGER

DANGER Risk of fire or explosion. Flammable refrigerant used. Do not use mechanical devices to defrost refrigerator. Do not puncture refrigerant tubing.

DANGER Risk of fire or explosion. Flammable refrigerant used. To be repaired only by trained service personnel. Use only manufacturer-authorized service parts. Any repair equipment used must be designed for flammable refrigerants. Follow all manufacturer repair instructions. Do not puncture refrigerant tubing.

CAUTION

CAUTION Risk of fire or explosion. Dispose of refrigerator properly in accordance with the applicable federal or local regulations. Flammable refrigerant used.

CAUTION Risk of fire or explosion due to puncture of refrigerant tubing. Follow handling instructions carefully. Flammable refrigerant used.

WARNING

CALIFORNIA RESIDENTS ONLY
Cancer and Reproductive Harm
www.P65Warnings.ca.gov

Child Safety

Destroy or recycle the carton, plastic bags, and any exterior wrapping material immediately after the refrigerator is unpacked. Children should never use these items to play. Cartons covered with rugs, bedspreads, plastic sheets or stretch wrap may become airtight chambers, and can quickly cause suffocation.

For your Safety

- DO NOT store or use gasoline, or other flammable liquids in the vicinity of this or any other appliance. Read product labels for warnings regarding flammability and other hazards.
- DO NOT operate the refrigerator in the presence of explosive fumes.
- Avoid contact with any moving parts of automatic ice maker.
- Remove all staples from the carton. Staples can cause severe cuts, and also destroy finishes if they come in contact with other appliances or furniture.

Proper Disposal of your unit

Risk of child entrapment

Child entrapment and suffocation are not problems of the past. Junked or abandoned refrigerators or freezers are still dangerous – even if they will sit for "just a few days". If you are getting rid of your old refrigerator or freezer, please follow the instructions below to help prevent accidents.

We strongly encourage responsible appliance recycling/disposal methods. Check with your utility company or visit. energystar.gov/recycle for more information on recycling your old refrigerator.

Before you throw away your old unitr:

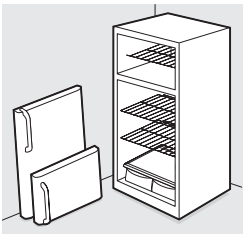

- Remove doors.
- Leave shelves in place so children may not easily climb inside.
- Have refrigerant removed by a qualified service technician.

IMPORTANT

Turning the Refrigerator controls to "0" will disable your refrigerator's cooling system, but does not disconnect the power to the light bulb and other electrical components. To turn off power to your refrigerator you must unplug the power cord from the electrical outlet.

WARNING

- When positioning the appliance, ensure the supply cord is not trapped or damaged.
- Do not locate multiple portable socket-outlets or portable power supplies at the rear of the appliance.

WARNING

Follow these guidelines to ensure that safety mechanisms in this refrigerator will operate properly.

Electrical information

- Plug the refrigerator into its own dedicated 115 Volt, 60 Hz., 15 Amp, AC only electrical outlet. The power cord of the appliance is equipped with a three-prong grounding plug for your protection against electrical shock hazards. Directly plug it into a properly grounded three prong receptacle. Install the receptacle in accordance with local codes and ordinances. Consult a qualified electrician. Do not use an extension cord or adapter plug.
- If the power cord is damaged, an authorized service technician should replace it to prevent any risk.
- Never unplug the refrigerator by pulling on the power cord. Always grip the plug firmly, and pull straight out from the receptacle to prevent damaging the power cord.
- Unplug the refrigerator before cleaning and before replacing a light bulb to avoid electrical shock.
- Performance may be affected if the voltage varies by 10% or more. Operating the refrigerator with insufficient power can damage the compressor. Such damage is not covered under your warranty.
- Do not plug the unit into an electrical outlet controlled by a wall switch or pull cord to prevent the refrigerator from being turned off accidentally.

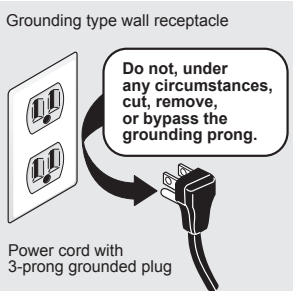

Features may vary according to model

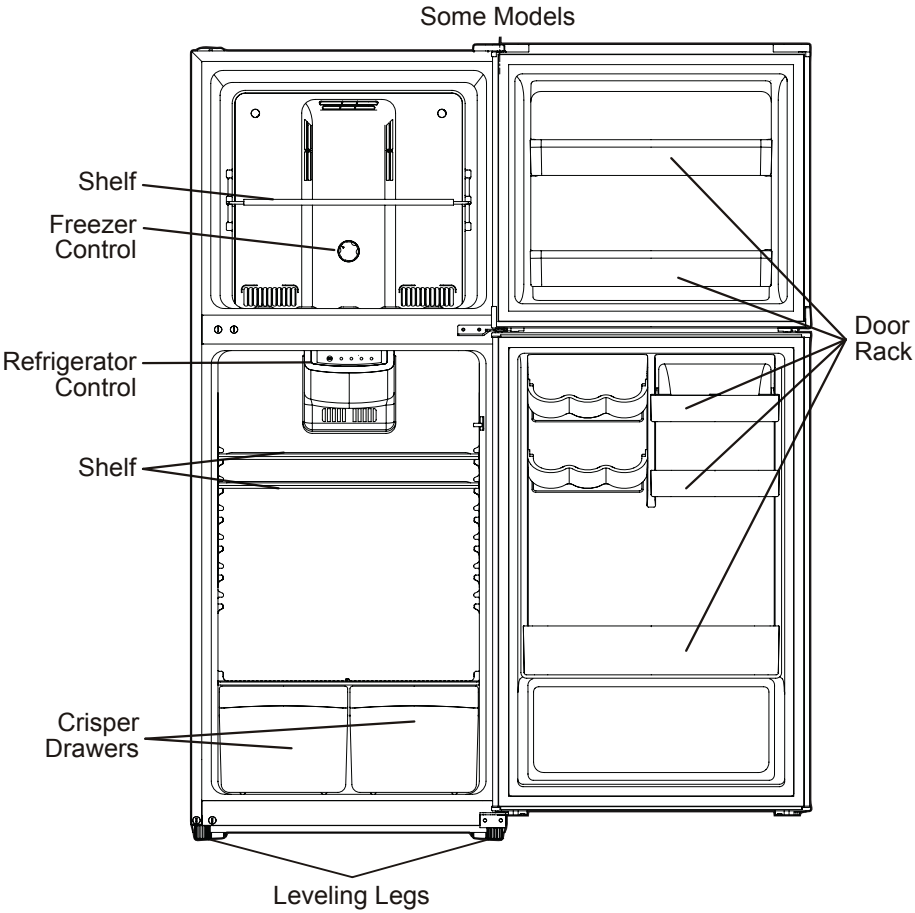

INSTALLATION

This Use & Care Manual provides general operating instructions for your model. Use the refrigerator only as instructed in this Use & Care Manual. Before starting the refrigerator, follow these important first steps.

Location

- Choose a place near a grounded electrical outlet. Do Not use an extension cord or an adapter plug.
- If possible, place the refrigerator out of direct sunlight and away from the range, dishwasher or other heat sources.
- Install the refrigerator on a floor that is level and strong enough to support a fully loaded refrigerator.

WARNING

This appliance is intended for use in residential household and similar interior applications such as:

- Kitchen / Kitchenette
- Pantry Room
- Basement
- Enclosed Garage
- Other interior residential type environments

CAUTION

Do not install the refrigerator where the surrounding air temperature may fall to 45°F (-7°C) or below. The refrigerator compartment contents may freeze. Do not install the refrigerator where the surrounding air temperature may reach 110°F (43°C) or above. The refrigerator and freezer compartments may rise to above normal operating temperatures.

Do not block the lower front of your refrigerator. Sufficient air circulation is essential for the proper operation of your refrigerator.

Installation

WARNING

Allow the following clearances for ease of installation, proper air circulation, and plumbing and electrical connections:

Sides & Top	3”
Back	4”

Guidelines for final positioning of your refrigerator:

- All four corners of the cabinet must rest firmly on the floor.
- The cabinet should be level at the front and rear.

To level the cabinet using the front leveling legs:

- Lower the leveling legs on each side counterclockwise until they contact the floor.

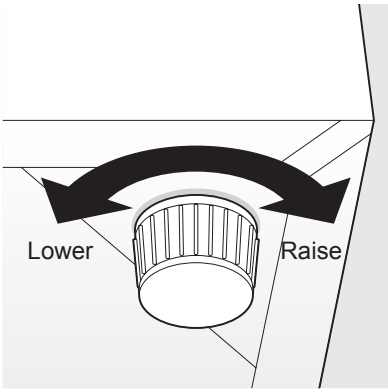

- Use the leveling legs (located on the front) ensure that all 4 corners of the unit are resting firmly on a solid floor. Turn the leveling legs clockwise to raise the legs and counterclockwise to lower the legs. Ensure the floor is strong enough to support a fully loaded unit.

DOOR REMOVAL/REVERSAL INSTRUCTIONS

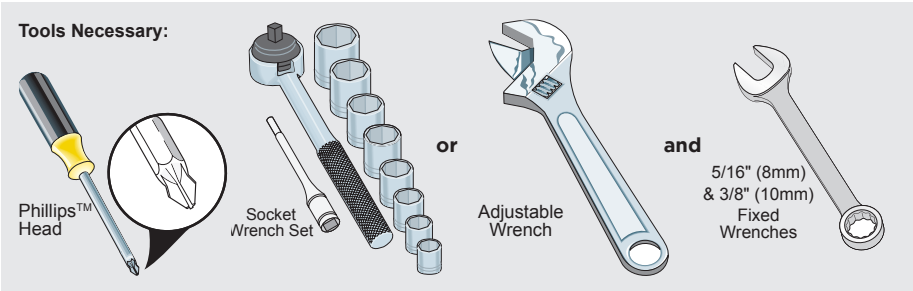

NOTE

You can reverse the direction in which your refrigerator doors open (door swing), from left to right or right to left, by moving the door hinges from one side to the other. A qualified person should reverse the door swing.

IMPORTANT

Before you begin, turn the refrigerator temperature control to “OFF”. Remove any food from door shelves.

IMPORTANT

A door reversal kit (top hinge cover, bottom hinge & freezer door closer) is packed inside the unit.

IMPORTANT

Place the door on a padded surface to avoid damage.

WARNING

When reversing the door, remove the electrical power cord from the wall outlet.

NOTE

Keep the screws and hinge spacers to use on the opposite side.

1. Remove the top right hinge cover and the screw cover using a nut driver.

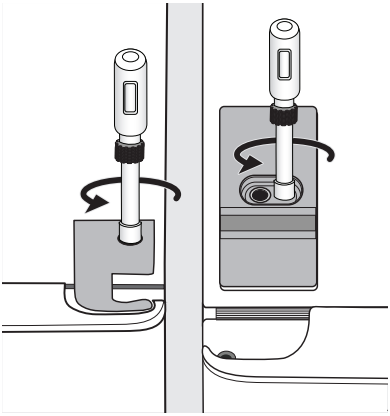

2. Remove the top hinge while securing the freezer door. Lift freezer door off then place on a soft pad to avoid damage.

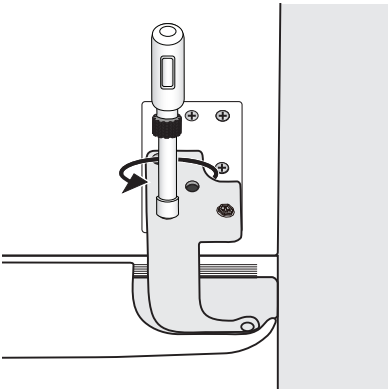

DOOR REMOVAL/REVERSAL INSTRUCTIONS

3. Remove and refit the pin of the top hinge on opposite side as shown.

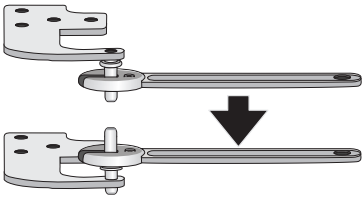

4. Remove the middle hinge and plastic washer while securing the refrigerator door. Lift refrigerator door off then place on a soft pad to avoid damage.

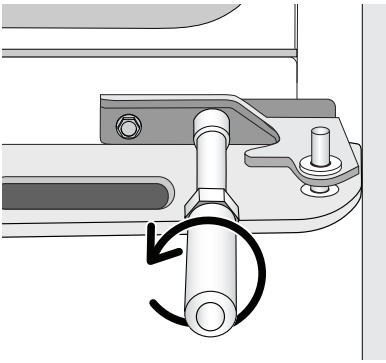

5. Swap the hole-plug and the hinge bushing located at the top of refrigerator door from the left to right side and vice-versa.

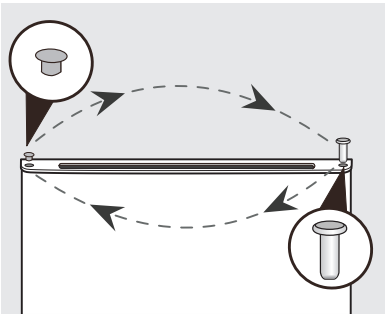

6. Move the middle hinge cover from left side to right side.

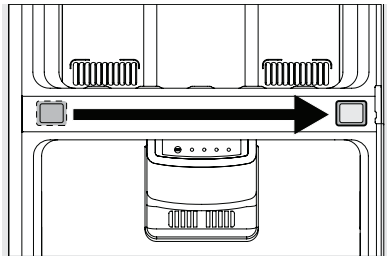

7. Place appliance to have access to the bottom of the refrigerator to perform next steps.

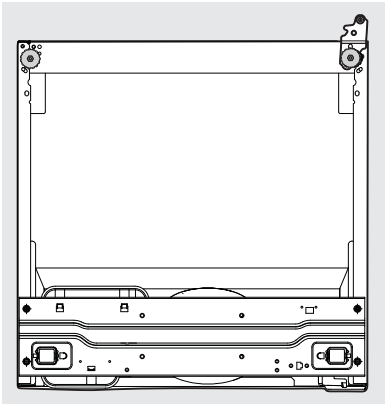

8. Remove the right adjustable foot. Then remove the bottom hinge using a nut driver.

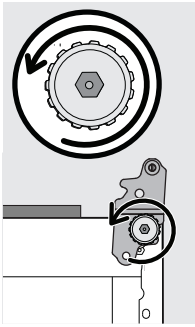

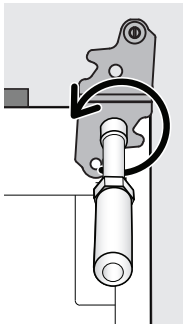

DOOR REMOVAL/REVERSAL INSTRUCTIONS

9. Unscrew the pin at the end of the bottom hinge, turn the hinge over and screw the pin into the opposite end of the hinge.

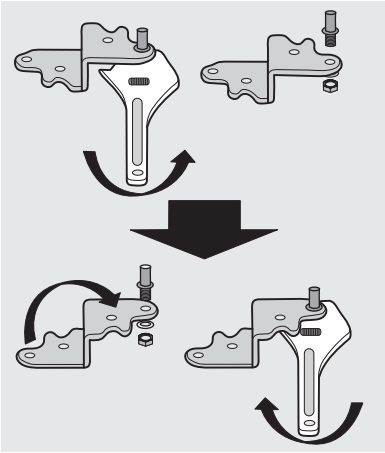

10. Move the hinge cover and left adjustable foot from left side to right side.

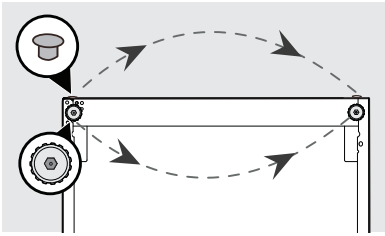

11. Install the left bottom hinge using a nut driver. Install right adjustable foot (from step 8) on left side.

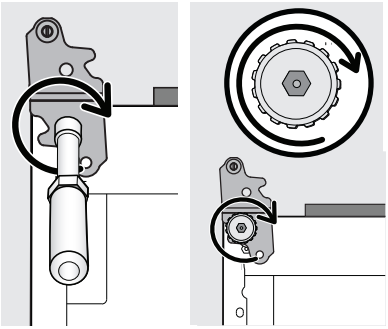

12 Set the refrigerator door on the lower hinge, then install the middle hinge and hinge cushion on left side (from step 4).

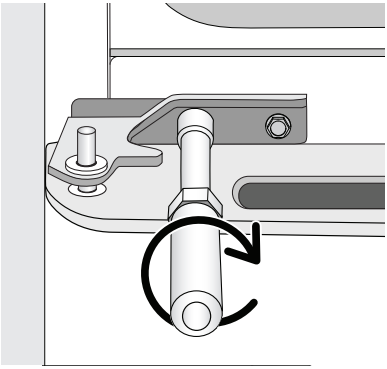

13 Set the freezer door on the middle hinge pin. Locate and install the top hinge (reverse of step 3).

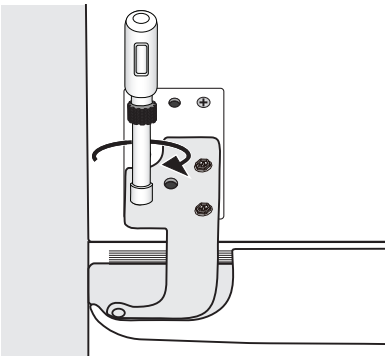

14 Install the top left hinge cover (from the accessory bag) to left side. Install the screw cover (from step 1) to the right side.

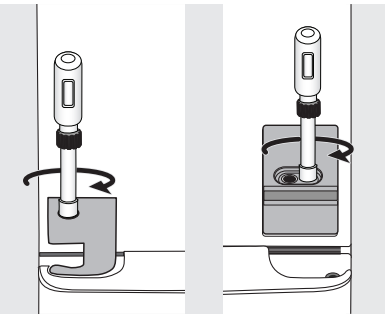

Freezer Temperature Adjustment

The freezer control can be left at the factory preset (RECOMMENDED) or adjusted as desired.

- Adjust temperature gradually: adjust the knob in small increments, allowing the temperature to stabilize.
- For colder temperatures, adjust the knob towards **COLDER**.
- For warmer temperatures, adjust the knob towards **COLD**.

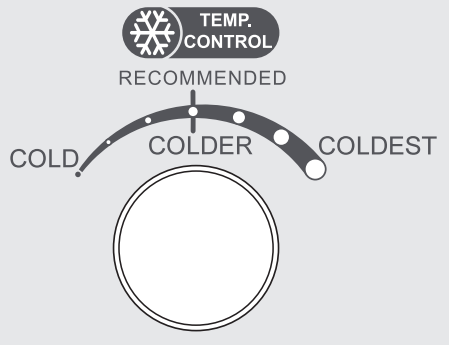

Freezer Control

Refrigerator Temperature Adjustment

The refrigerator control can be left at the factory preset (RECOMMENDED) or adjusted as desired.

- Adjust temperature gradually allowing the temperature to stabilize.
- For colder temperatures, use the **SET** key and choose **COLDER**.
- For warmer temperatures, use the **SET** key and choose **COLD**.

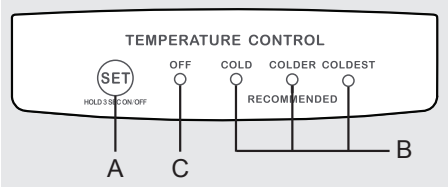

Refrigerator Control

A **SET** - Push the **SET** key to change between **COLD, COLDER (RECOMMENDED),** and **COLDEST** temperatures.

B **COLD, COLDER (RECOMMENDED), COLDEST** - Indicates the setting of the refrigerator compartment by LED indicator lights.

C **OFF** - To turn the power off, press and hold the **SET** key for 3 seconds. The **OFF** indicator light will be on.

To turn the power on, press and hold the **SET** key for 3 seconds. The power will turn on and the **OFF** indicator light on the control panel will turn off.

CAUTION

Do not clean glass shelves or covers with warm water when they are cold. Shelves and covers may break if exposed to sudden temperature changes or impact, such as bumping. Tempered glass is designed to shatter into many small, pebble-size pieces. This is normal. Glass shelves and covers are heavy. Use both hands when removing them to avoid dropping.

Shelf Adjustment

Refrigerator shelves are easily adjusted to suit individual needs. Before adjusting the shelves, remove all food.

To adjust shelves:

1. Remove shelf by raising the back of the shelf out of side rail, then continue to remove shelf by pulling forward.
2. To replace shelf, rest side edges on any pair of shelf rails and carefully push shelf back into position and engage in the side rail stop.

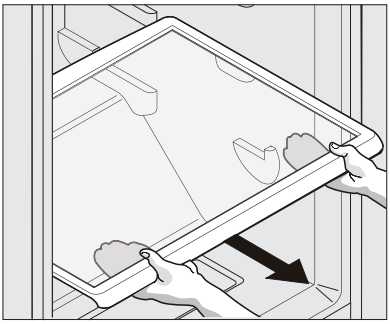

Glass Shelf

Door storage

Door bins, shelves, and racks are provided for convenient storage of jars, bottles, and cans. Frequently used items can be quickly selected.

The dairy compartment, which is warmer than the general food storage section, is intended for short term storage of cheese, spreads, or butter.

Crisper Humidity Controls

The crisper humidity controls, present on the crisper drawers of some models, allows you to adjust the humidity within the crisper. This can extend the life of fresh vegetables that keep best in high humidity.

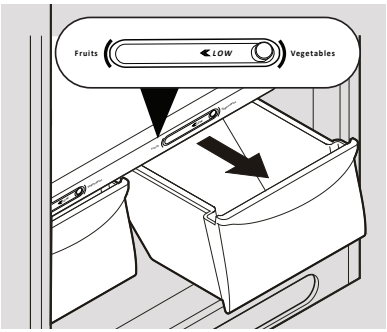

NOTE

Leafy vegetables keep best when stored with the Humidity Control set on High Humidity, or in a drawer without a Humidity Control. This keeps incoming air to a minimum and maintains maximum moisture content. Store non-leafy vegetables and fruits still in their skins at the low humidity setting.

Crispers

The crispers, located under the bottom refrigerator shelf, are designed for storing fruits, vegetables, and other fresh produce. Wash items in clear water and remove excess water before placing them in the crispers. Items with strong odors or high moisture content should be wrapped before storing.

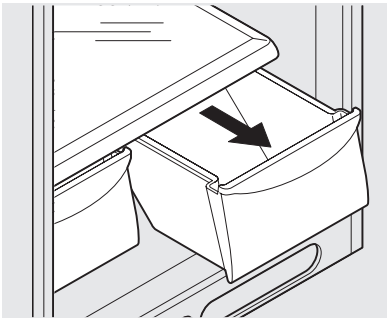

Care & Cleaning Tips		
Part	**What To Use**	**Tips and Precautions**
Interior & Door Liners	• Soap and water • Baking soda and water	Use 2 tablespoons of baking soda in 1 quart of warm water. Be sure to wring excess water out of sponge or cloth before cleaning around controls, light bulb or any electrical part.
Door Gaskets	• Soap and water	Wipe gaskets with a clean soft cloth.
Drawers & Bins	• Soap and water	Use a soft cloth to clean drawer runners and tracks.
Glass Shelves	• Soap and water • Glass cleaner • Mild liquid sprays	Allow glass to warm to room temperature before immersing in warm water.
Exterior	• Soap and water • Non Abrasive Glass Cleaner	Do not use commercial household cleaners containing ammonia, bleach or alcohol to clean. Use a soft cloth to clean. DO NOT use a dry cloth to clean smooth doors.
Exterior (Stainless Steel Models Only)	• Soap and water • Stainless Steel Cleaners	Never use CHLORIDE or cleaners with bleach to clean stainless steel. Clean stainless steel front with non-abrasive soapy water and a dishcloth. Rinse with clean water and a soft cloth. Use a non-abrasive stainless steel cleaner. These cleaners can be purchased at most home improvement or major department stores. Always follow manufacturer's instructions. Do not use household cleaners containing ammonia or bleach. NOTE: Always clean, wipe and dry with the grain to prevent scratching. Wash the rest of the cabinet with warm water and mild liquid detergent. Rinse well, and wipe dry with a clean soft cloth.

1-800-374-4432 (United States)
1-800-265-8352 (Canada)

Visit our web site at
Frigidaire.com.

Common Occurrences	Before calling for service, review this list. It may save you time and expense. This list includes common occurrences that are not the result of defective workmanship or materials in this appliance.
Refrigerator does not run.	• Ensure plug is tightly pushed into electrical outlet. • Check/replace fuse with a 15 amp time-delay fuse. Reset circuit breaker. • The refrigerator/freezer control is turned to “0” (Mechanical controls) or “OFF” (Electronic controls). • Refrigerator may be in defrost cycle. Wait 20 minutes and check again.
Freezer temperature is colder than preferred. Refrigerator temperature is satisfactory.	• Set freezer control to a warmer setting until freezer temperature is satisfactory. Allow 24 hours for the temperature to stabilize.
Refrigerator temperature is too cold. Freezer temperature is satisfactory.	• Set refrigerator/freezer control to a warmer setting. Allow 24 hours for temperature to stabilize. Then check freezer temperatures and adjust as needed.
Freezer temperature is warmer than preferred. Refrigerator temperature is satisfactory.	• Set freezer control to a colder setting until freezer temperature is satisfactory. Allow 24 hours for the temperature to stabilize.
Refrigerator temperature is too warm. Freezer temperature is satisfactory.	• Set refrigerator/freezer control to a colder setting. Allow 24 hours for temperature to stabilize. Then check refrigerator temperatures and adjust as needed.
Refrigerator is noisy or vibrates.	• The cabinet is not level. • Floor is weak.
Odors in refrigerator.	• Interior needs to be cleaned. • Foods that produce odors should be covered or wrapped.
Cabinet light not working.	• Replace light bulb. • Ensure plug is tightly pushed into electrical outlet. • Light switch may be stuck. Push in light switch, located on the refrigerator control box, to release.

LIMITED WARRANTY

Your appliance is covered by a one year limited warranty. For one year from your date of delivery, Electrolux will pay all costs for repairing or replacing any parts of this appliance that prove to be defective in materials or workmanship when such appliance is installed, used and maintained in accordance with the provided instructions.

Exclusions

This warranty does not cover the following:

Products with original serial numbers that have been removed, altered or cannot be readily determined.

Product that has been transferred from its original owner to another party or removed outside the USA or Canada.

Rust on the interior or exterior of the unit.

Products purchased “as-is” are not covered by this warranty.

Food loss due to any refrigerator or freezer failures.

Products used in a commercial setting.

Service calls which do not involve malfunction or defects in materials or workmanship, or for appliances not in ordinary household use or used other than in accordance with the provided instructions.

Service calls to correct the installation of your appliance or to instruct you how to use your appliance.

Expenses for making the appliance accessible for servicing, such as removal of trim, cupboards, shelves, etc., which are not a part of the appliance when it is shipped from the factory.

Service calls to repair or replace appliance light bulbs, air filters, water filters, other consumables, or knobs, handles, or other cosmetic parts.

Surcharges including, but not limited to, any after hour, weekend, or holiday service calls, tolls, ferry trip charges, or mileage expense for service calls to remote areas, including the state of Alaska.

Damages to the finish of appliance or home incurred during installation, including but not limited to floors, cabinets, walls, etc.

Damages caused by: services performed by unauthorized service companies; use of parts other than genuine Electrolux parts or parts obtained from persons other than authorized service companies; or external causes such as abuse, misuse, inadequate power supply, accidents, fires, or acts of God.

DISCLAIMER OF IMPLIED WARRANTIES; LIMITATION OF REMEDIES

CUSTOMER’S SOLE AND EXCLUSIVE REMEDY UNDER THIS LIMITED WARRANTY SHALL BE PRODUCT REPAIR OR REPLACEMENT AS PROVIDED HEREIN. CLAIMS BASED ON IMPLIED WARRANTIES, INCLUDING WARRANTIES OF MERCHANTABILITY OR FITNESS FOR A PARTICULAR PURPOSE, ARE LIMITED TO ONE YEAR OR THE SHORTEST PERIOD ALLOWED BY LAW, BUT NOT LESS THAN ONE YEAR. ELECTROLUX SHALL NOT BE LIABLE FOR CONSEQUENTIAL OR INCIDENTAL DAMAGES SUCH AS PROPERTY DAMAGE AND INCIDENTAL EXPENSES RESULTING FROM ANY BREACH OF THIS WRITTEN LIMITED WARRANTY OR ANY IMPLIED WARRANTY. SOME STATES AND PROVINCES DO NOT ALLOW THE EXCLUSION OR LIMITATION OF INCIDENTAL OR CONSEQUENTIAL DAMAGES, OR LIMITATIONS ON THE DURATION OF IMPLIED WARRANTIES, SO THESE LIMITATIONS OR EXCLUSIONS MAY NOT APPLY TO YOU. THIS WRITTEN WARRANTY GIVES YOU SPECIFIC LEGAL RIGHTS. YOU MAY ALSO HAVE OTHER RIGHTS THAT VARY FROM STATE TO STATE.

If You Need Service

Keep your receipt, delivery slip, or some other appropriate payment record to establish the warranty period should service be required. If service is performed, it is in your best interest to obtain and keep all receipts. Service under this warranty must be obtained by contacting Electrolux at the addresses or phone numbers below.

This warranty only applies in the USA and Canada. In the USA, your appliance is warranted by Electrolux Major Appliances North America, a division of Electrolux Home Products, Inc. In Canada, your appliance is warranted by Electrolux Canada Corp. Electrolux authorizes no person to change or add to any obligations under this warranty. Obligations for service and parts under this warranty must be performed by Electrolux or an authorized service company. Product features or specifications as described or illustrated are subject to change without notice.

USA
1-800-374-4432
Frigidaire
10200 David Taylor Drive
Charlotte, NC 28262

Electrolux

Canada
1.800.265.8352
Electrolux Canada Corp.
5855 Terry Fox Way
Mississauga, Ontario, Canada
L5V 3E4

FRIGIDAIRE

welcome **home**

Our home is your home. Visit us if you need help with any of these things:

- owner support
- accessories
- service
- registration

(See your registration card for more information.)

Frigidaire.com
1-800-374-4432

Frigidaire.ca
1-800-265-8352