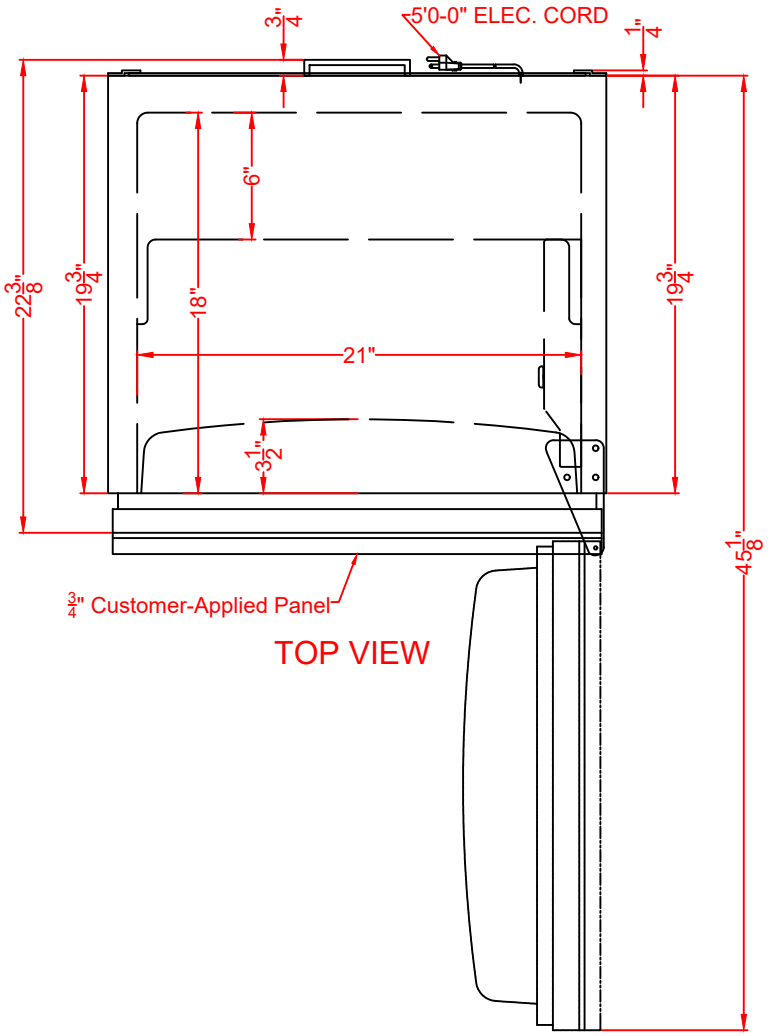

TOP VIEW

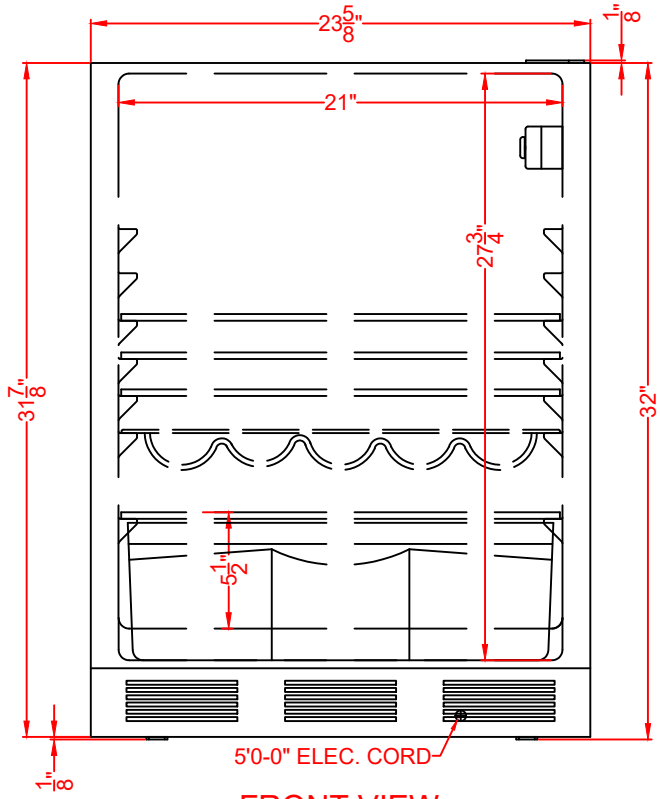

FRONT VIEW

FF6BK2SSIFADA

Refrigerator

05/01/23

SUMMIT
FELIX STORCH, INC.
www.summitappliance.com
718-893-3900