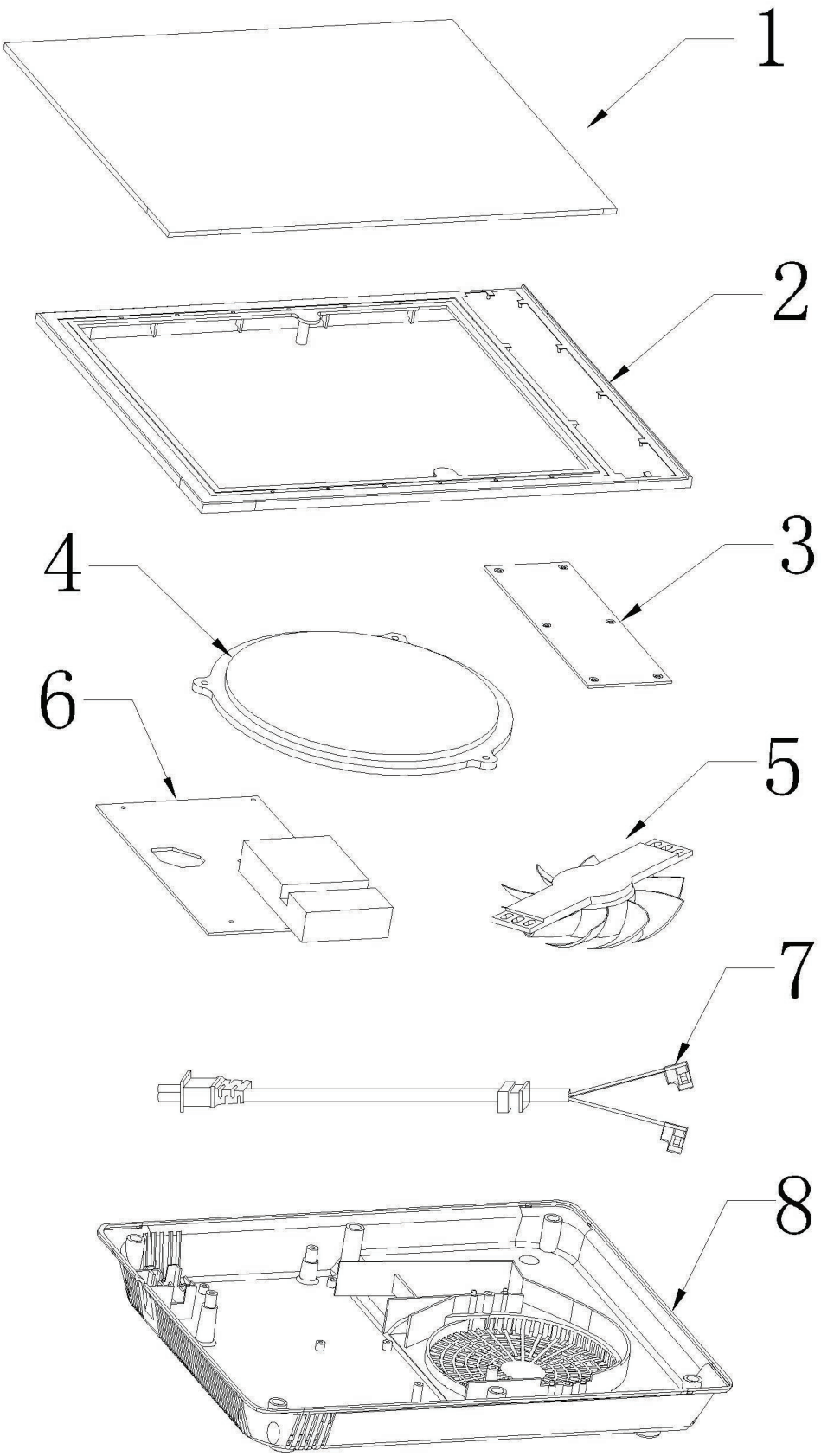

Number	Parts Name
1	Crystal glass
2	Plastic top frame
3	Light board
4	Heater coil
5	Fan
6	Master board
7	Power cord & plug
8	bottom housing