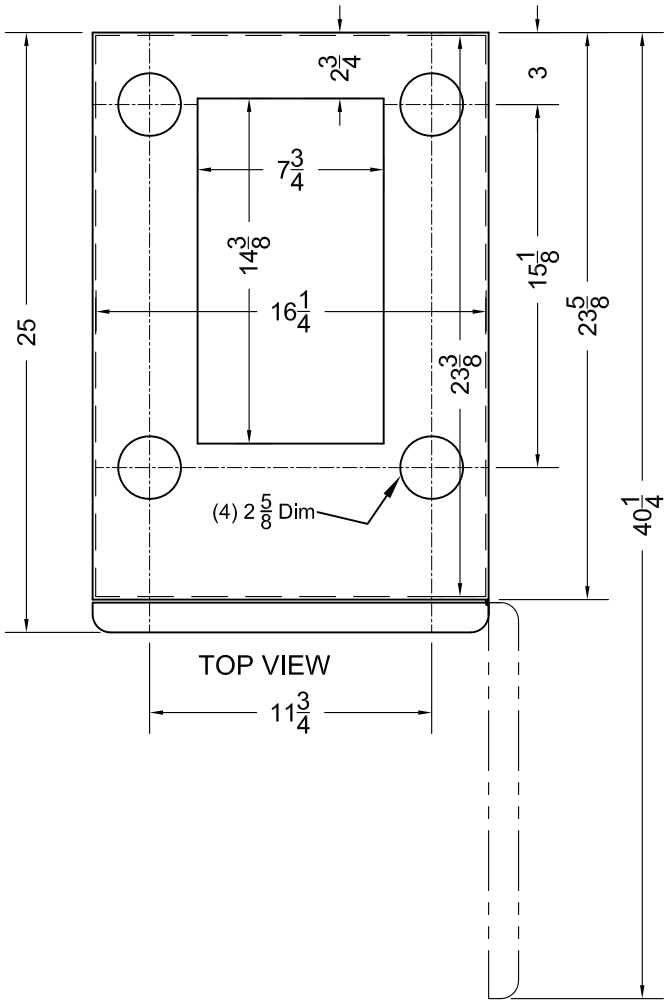

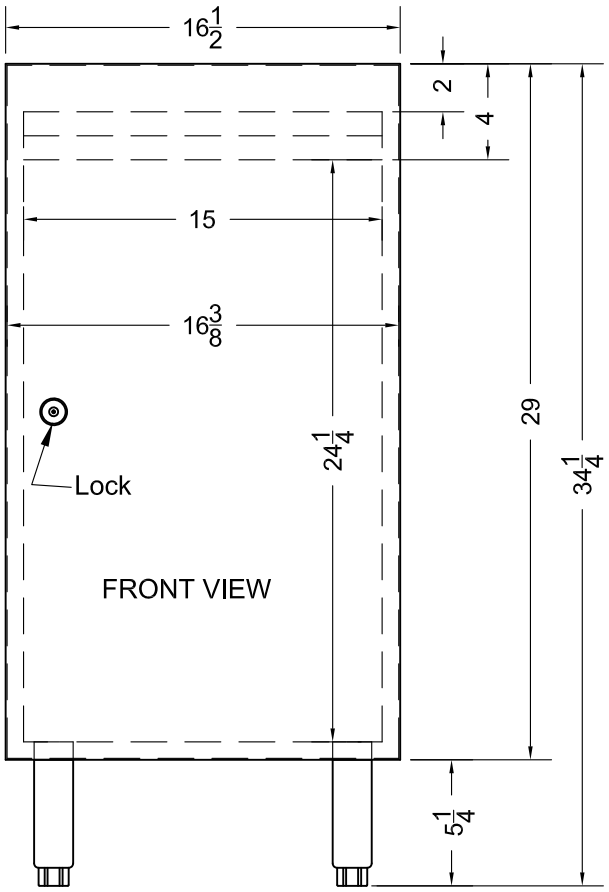

MODEL: AIWDCAB1

TYPE:
CABINET

SUMMIT
SPECIALTY MAJOR APPLIANCES

FELIX STORCH INC
www.summitappliance.com
(718) 893-3900

DATE: AUG./24/2022