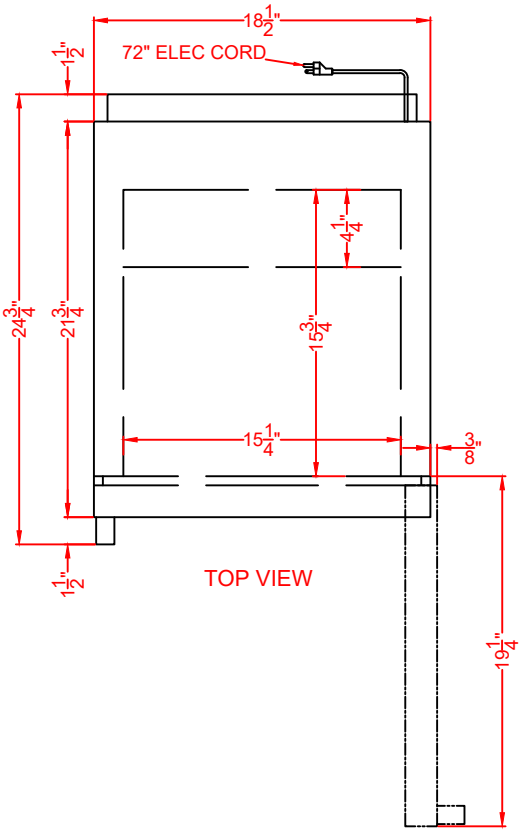

TOP VIEW

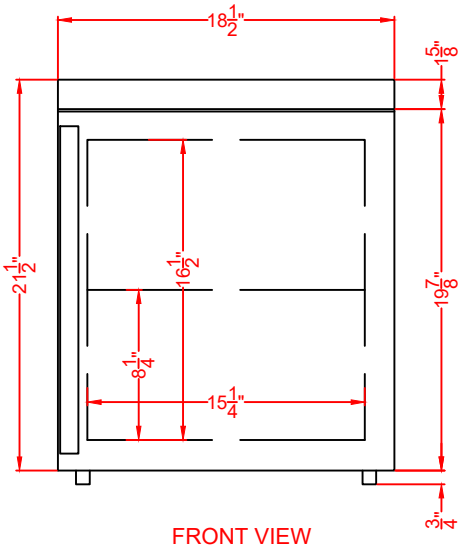

FRONT VIEW

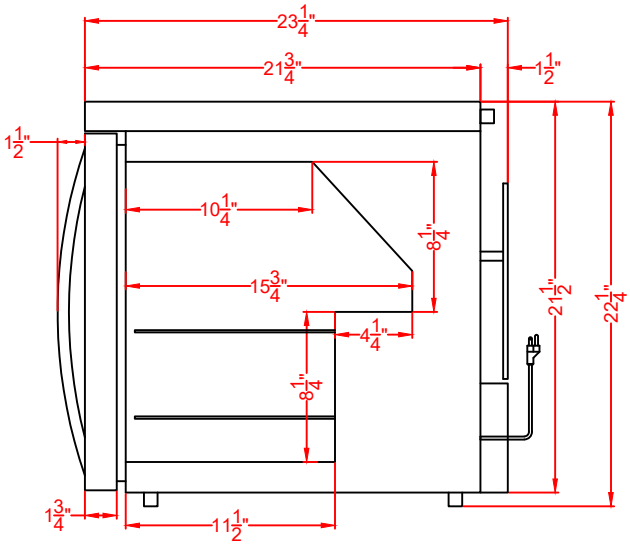

PROFILE VIEW

ARS2PV

Refrigerator

09/26/23

accucold by SUMMIT APPLIANCE

FELIX STORCH, INC.

www.medicalrefrigerators.com

718-893-3900