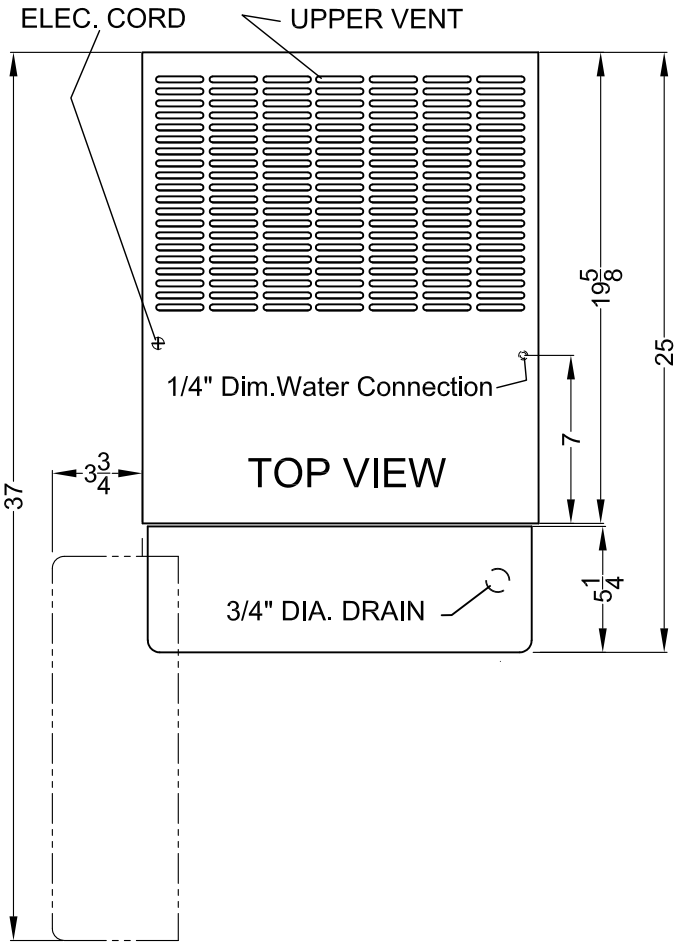


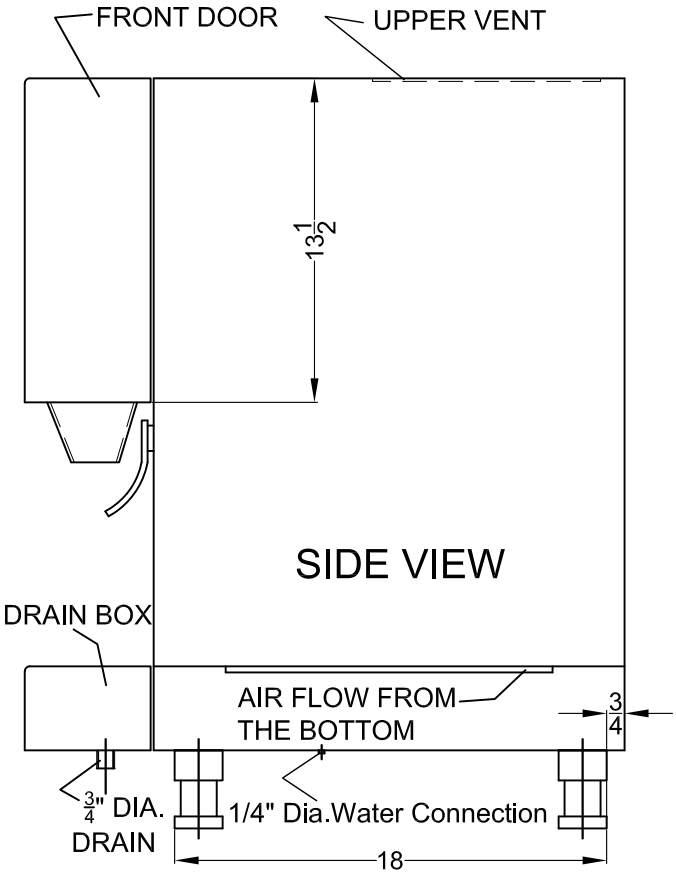


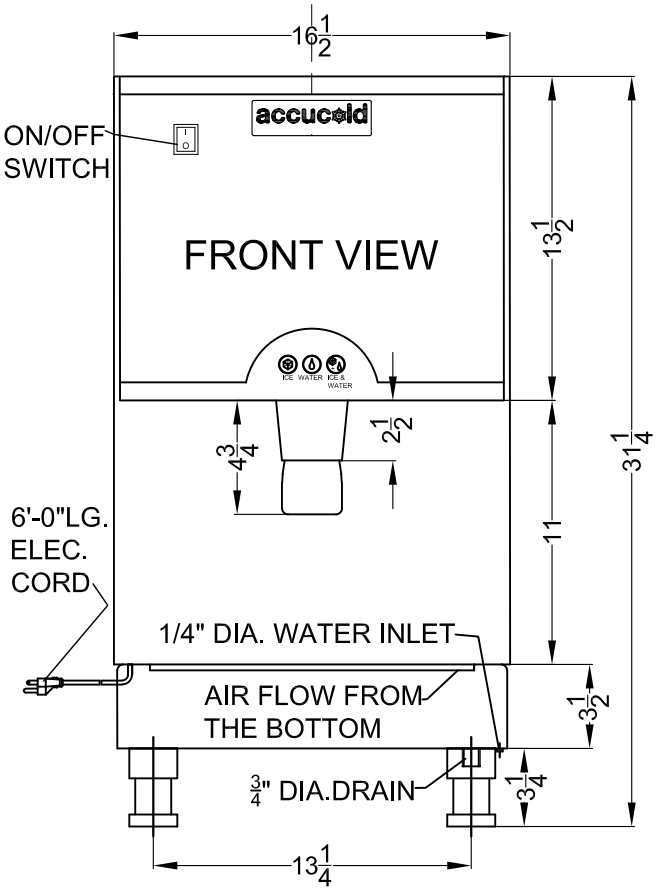


MODEL: AIWD282

TYPE:
ICE AND WATER DISPENSER

SUMMIT
FELIX STORCH, INC.
www.summitappliance.com
718-893-3900

DATE: JAN./20/2020