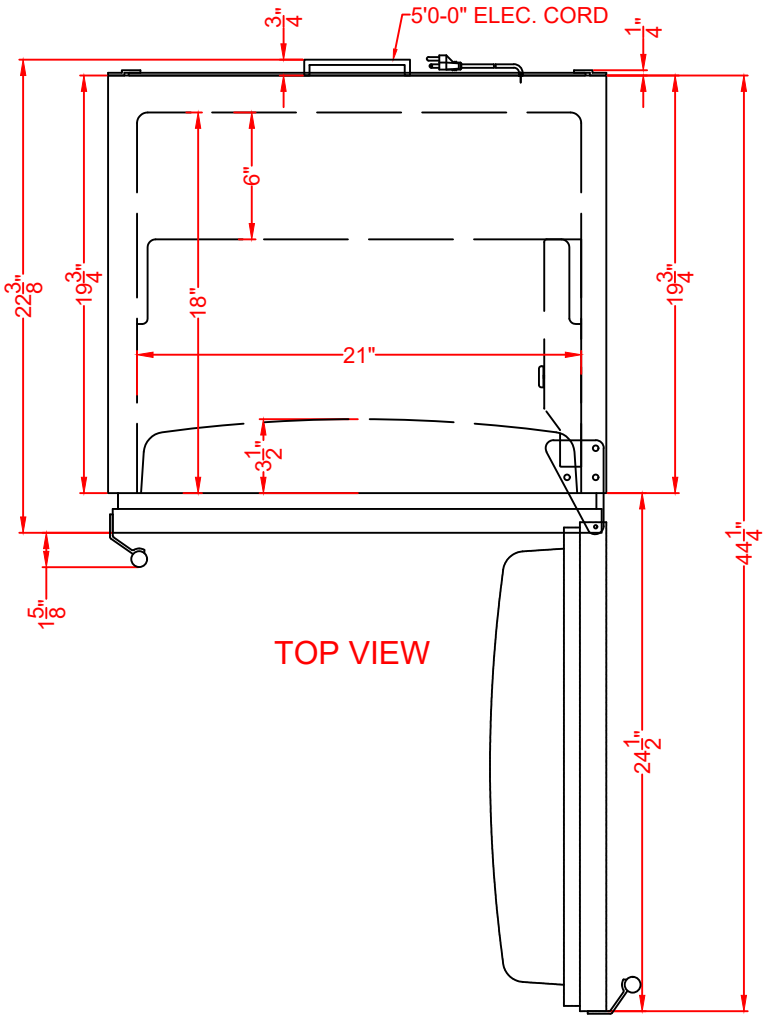

TOP VIEW

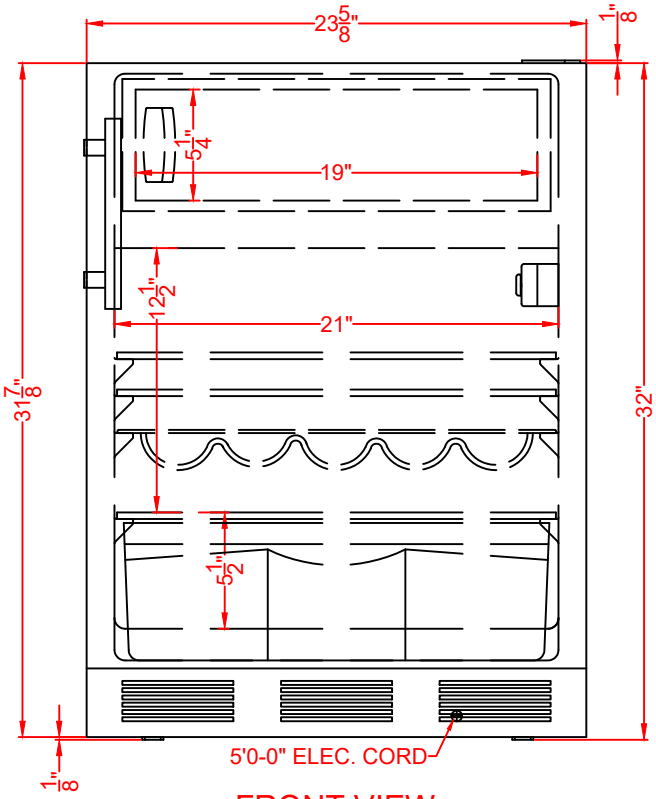

FRONT VIEW

CT66*ADA

Refrigerator-Freezer

04/25/23

SUMMIT
FELIX STORCH, INC.
www.summitappliance.com
718-893-3900