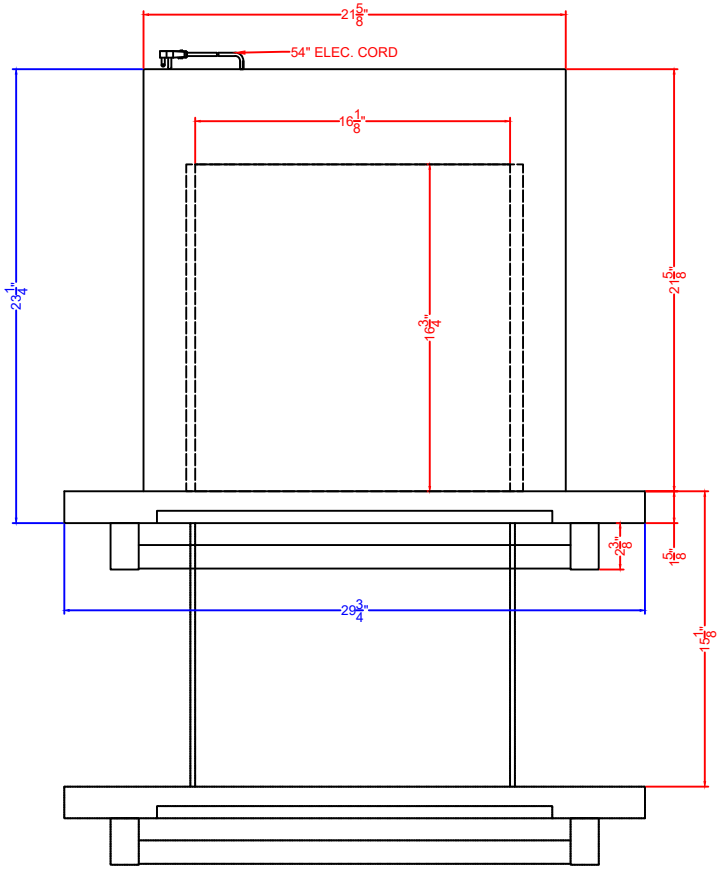

TOP VIEW

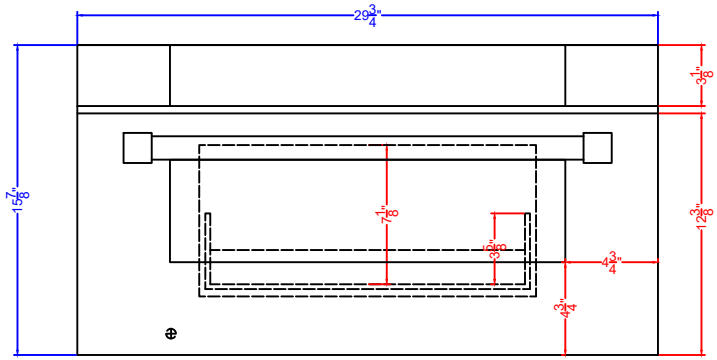

FRONT VIEW

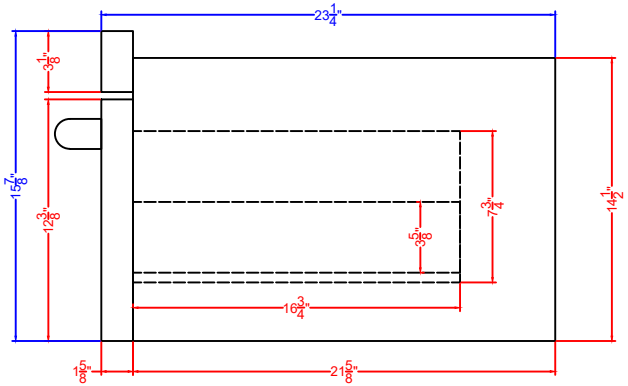

Profile View

MDR30SS

Drawer-Microwave

08/28/24

SUMMIT

FELIX STORCH, INC.

www.summitappliance.com

718-893-3900