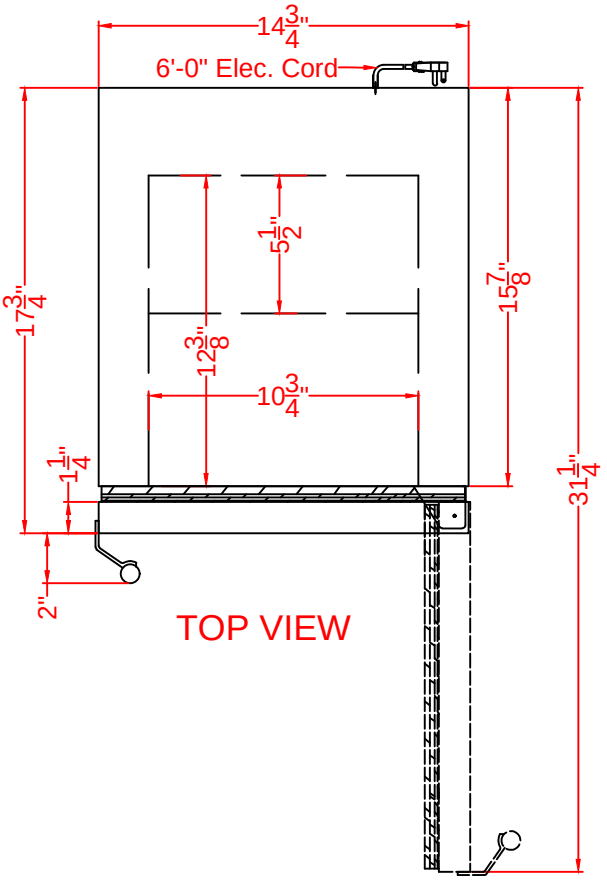

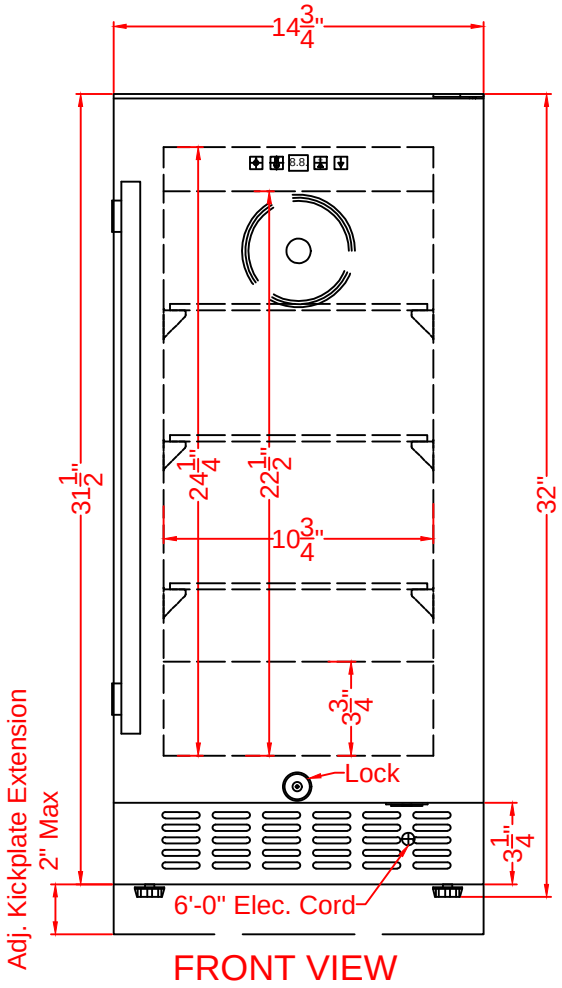

ASDS1523

Refrigerator

08/31/22

SUMMIT
FELIX STORCH, INC.
www.summitappliance.com
718-893-3900