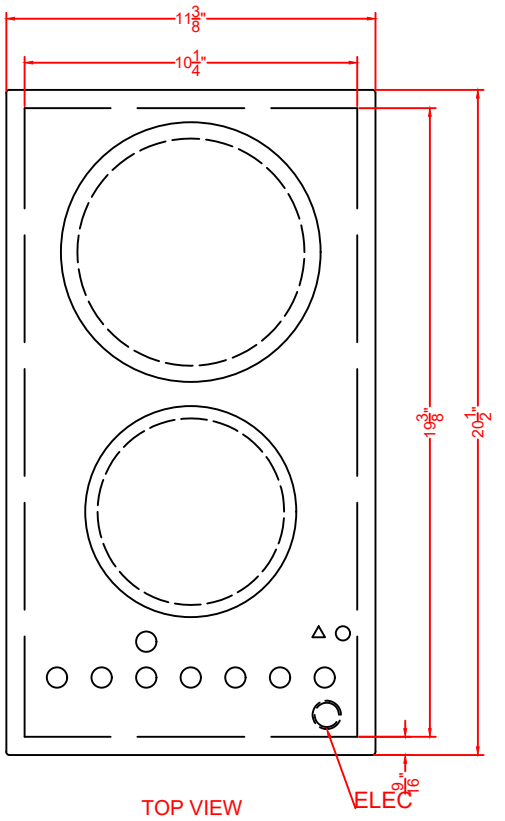

TOP VIEW

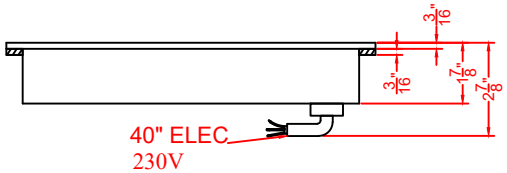

FRONT VIEW

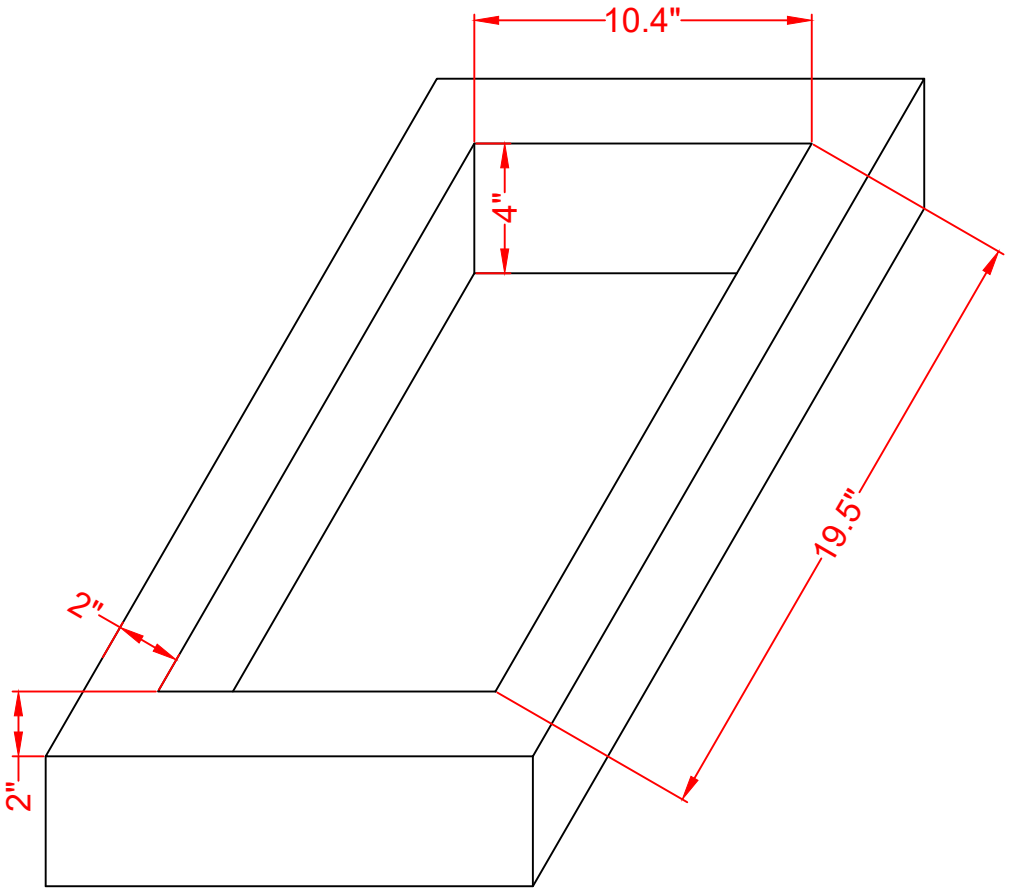

CUTOUT

CRH2BT30230

Cooktop

09/18/23

SUMMIT
FELIX STORCH, INC.
www.summitappliance.com
718-893-3900