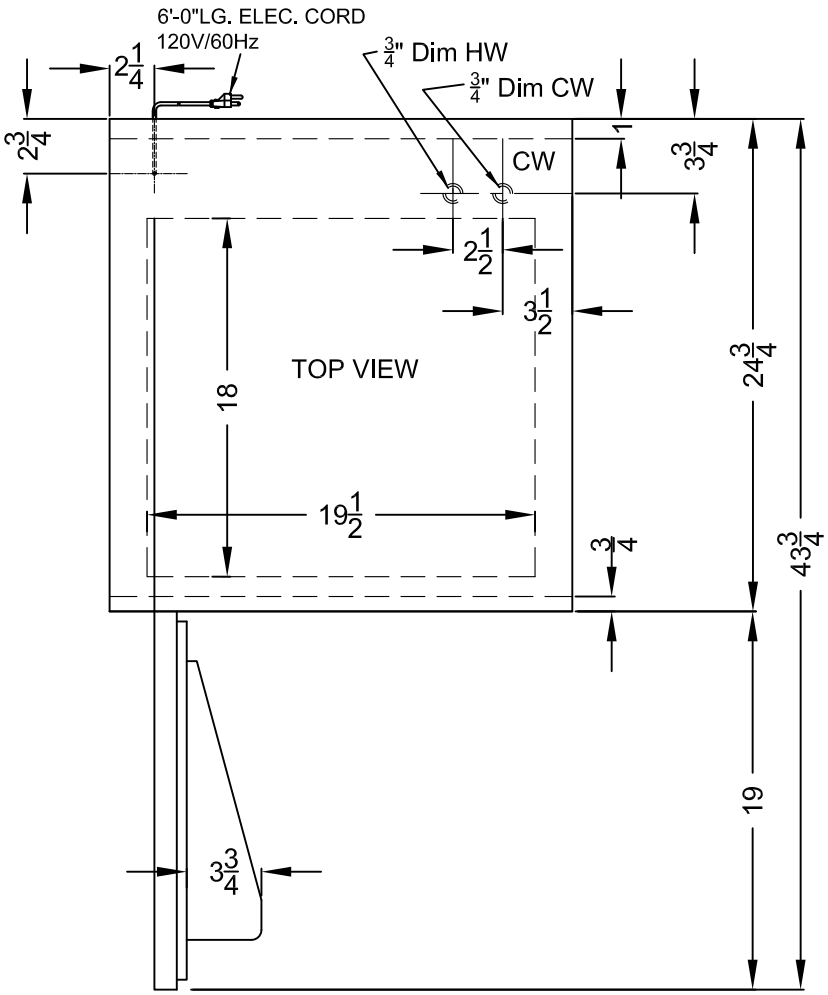

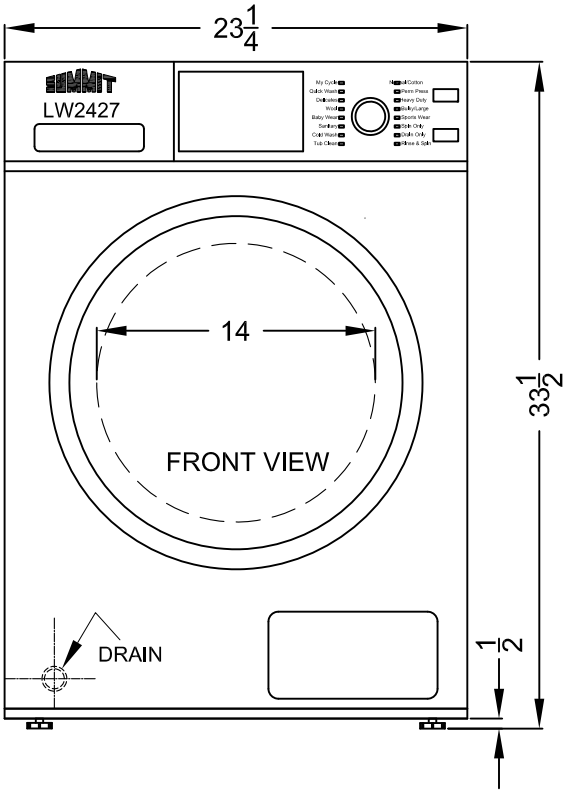

MODEL NO. LW2427

TYPE:
WASHER

SUMMIT

FELIX STORCH, INC.
www.summitappliance.com
718-893-3900

DATE: MAR./17/2022