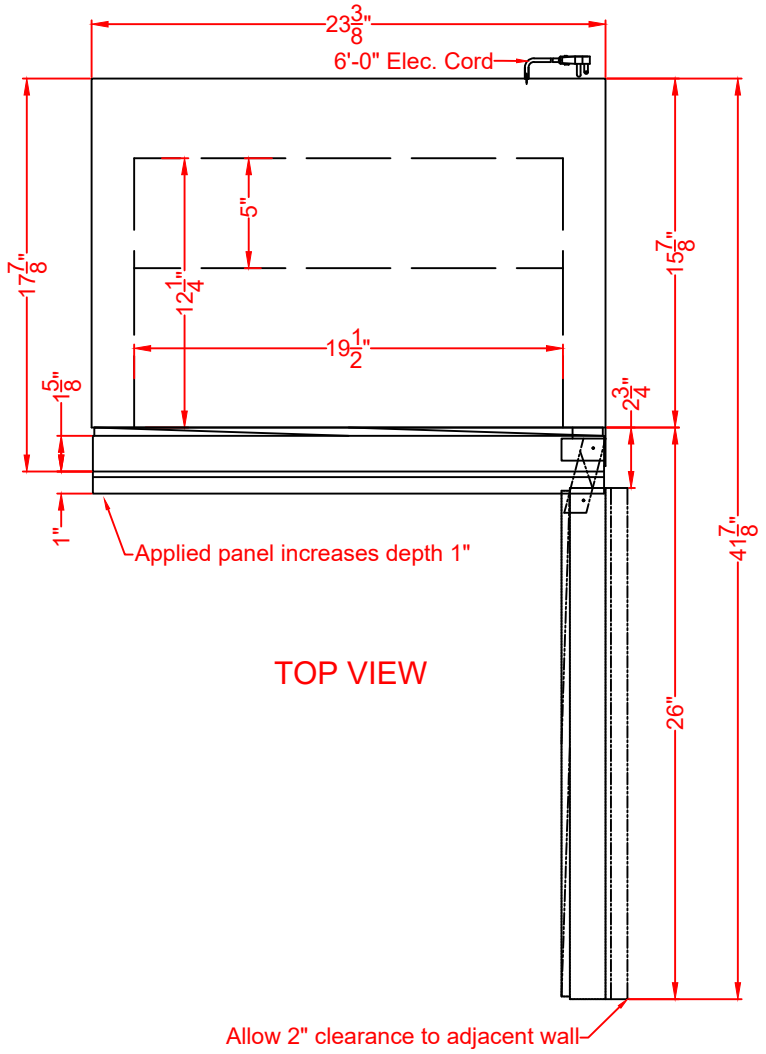

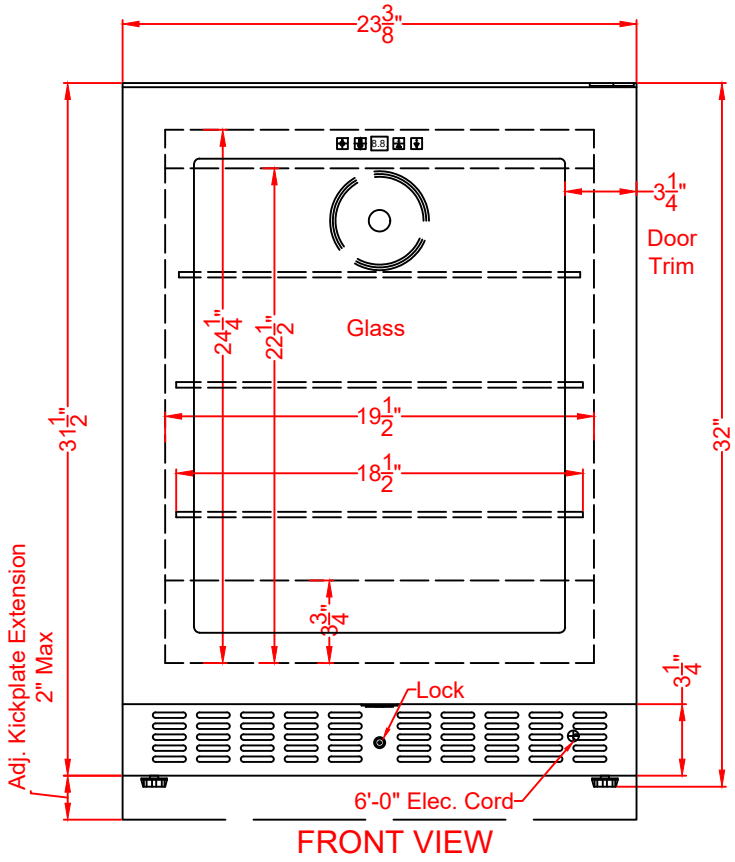

ASDG2411PNR

Refrigerator

06/21/23

SUMMIT
FELIX STORCH, INC.
www.summitappliance.com
718-893-3900