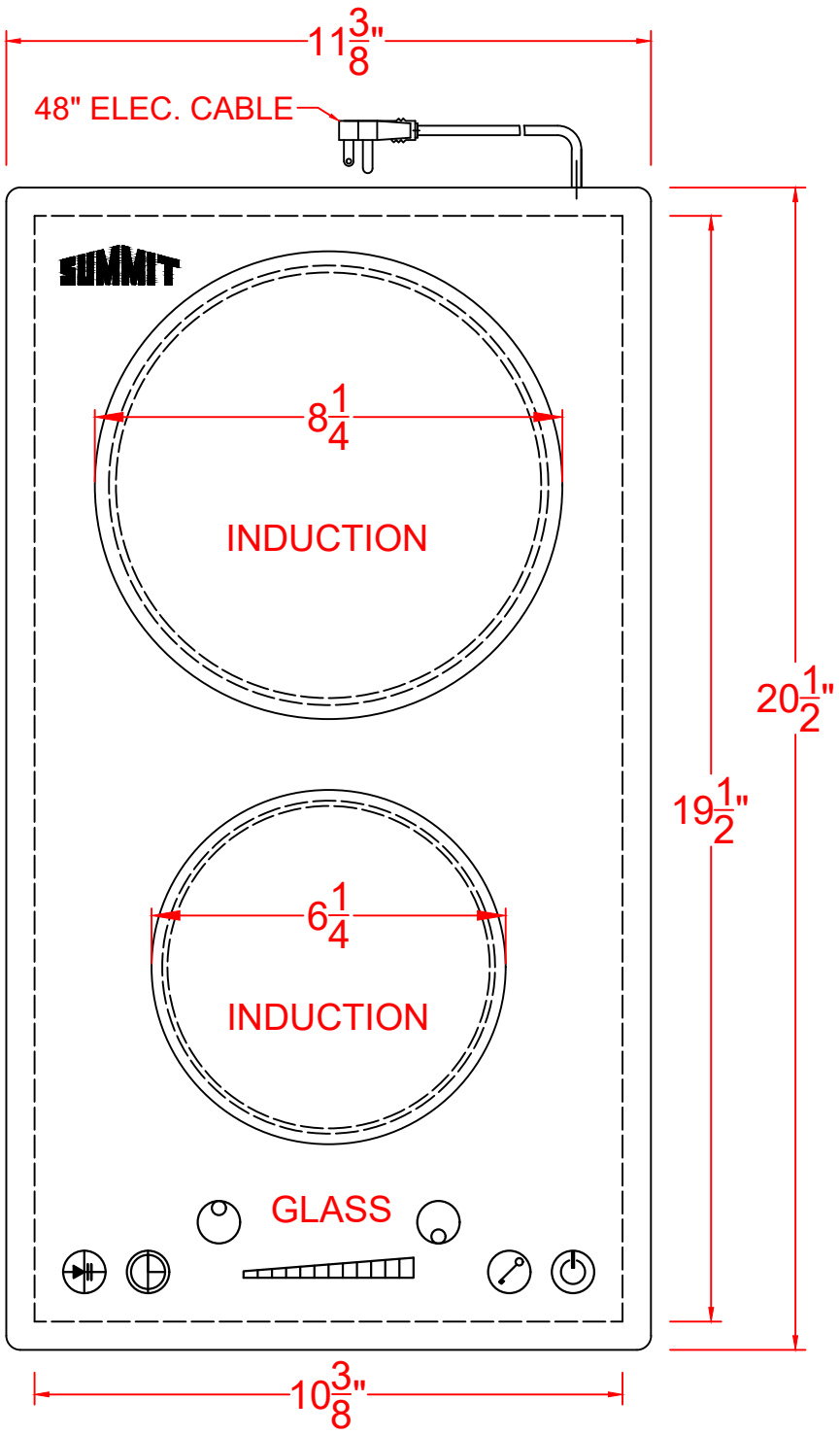

TOP VIEW

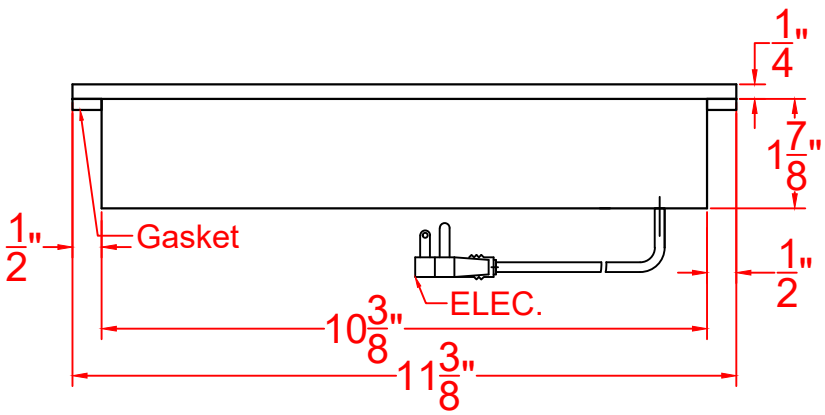

FRONT VIEW

SINC2B115

Cooktop

06/02/22

SUMMIT
FELIX STORCH, INC.
www.summitappliance.com
718-893-3900