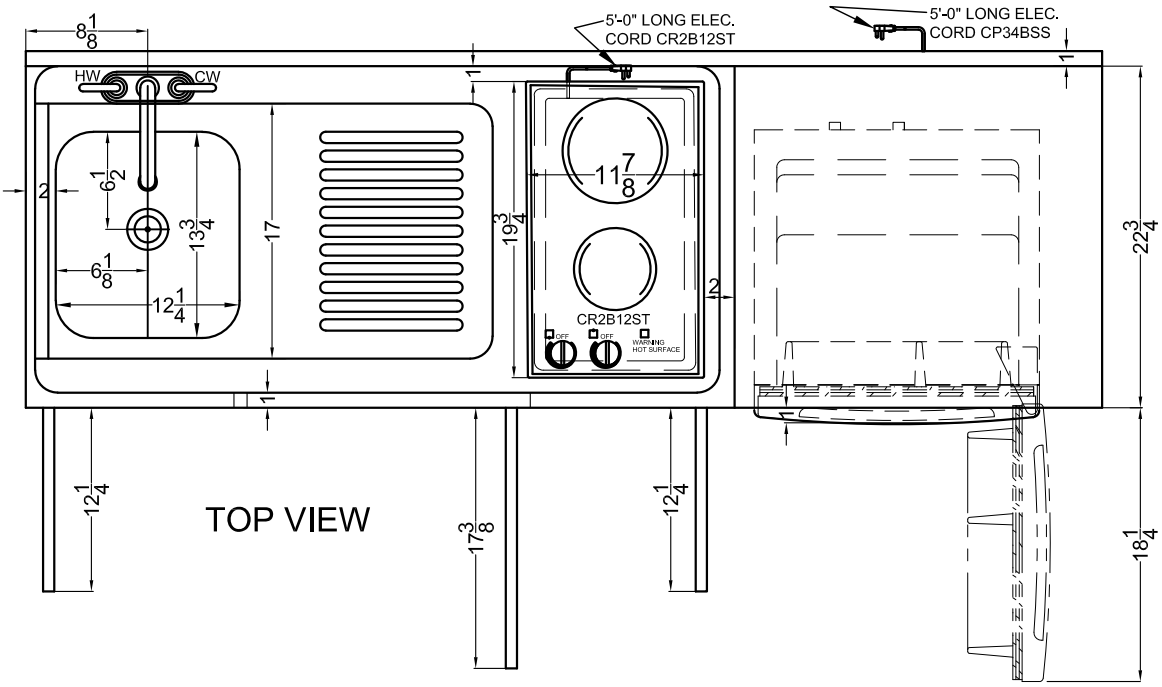

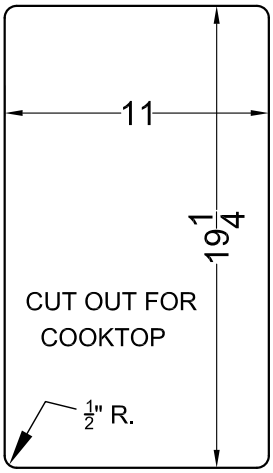

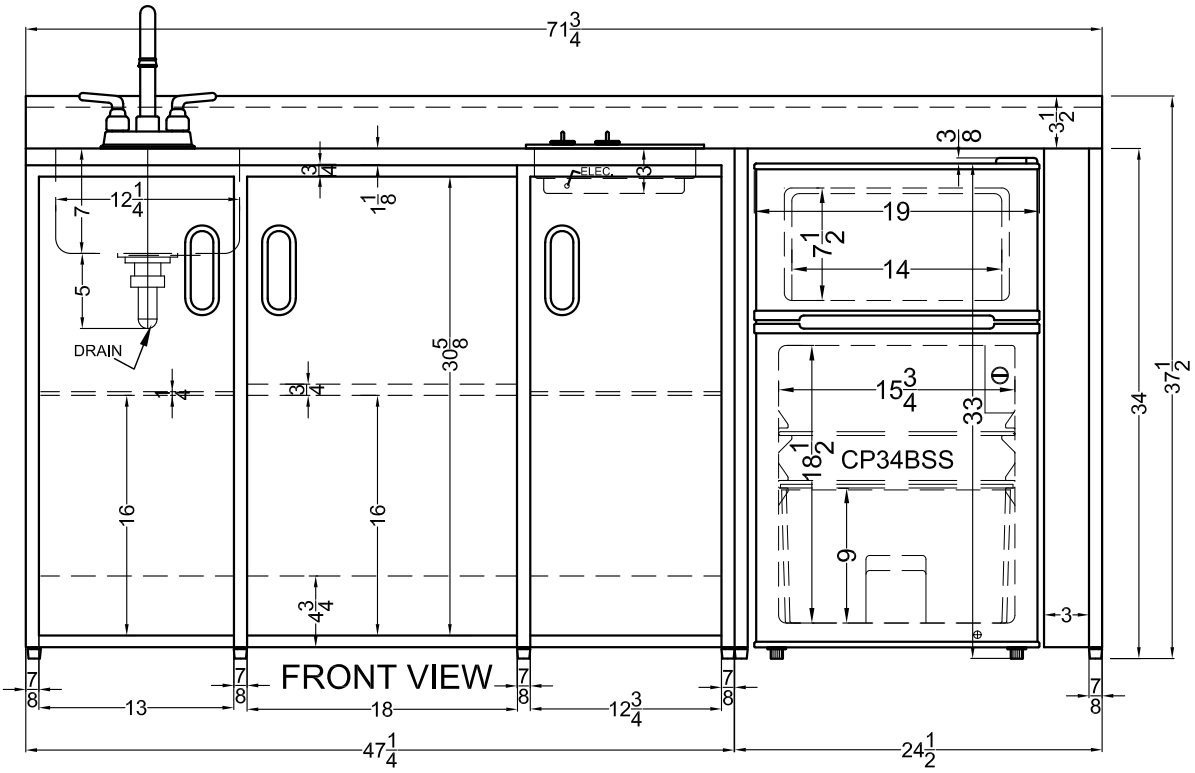

MODEL CK72ADASINKL

TYPE.
COMBO KITCHEN

SUMMIT

FELIX STORCH, INC.
www.summitappliance.com
718-893-3900

SCALE: 1 1/4" = 1'-0"
DATE: MAY/07/2021