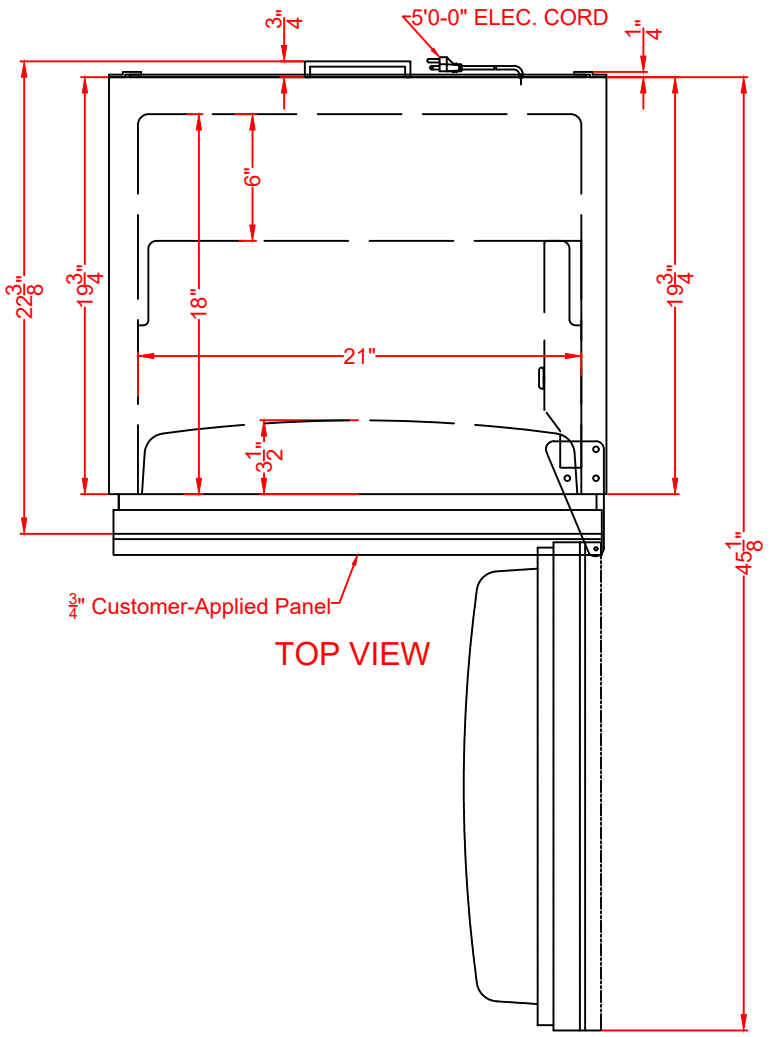

TOP VIEW

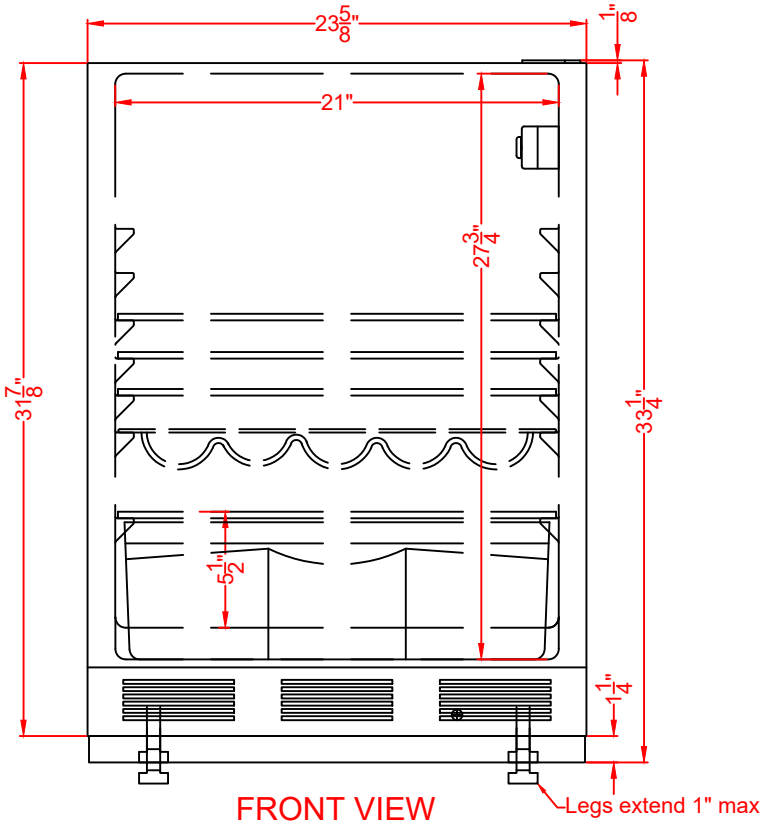

FRONT VIEW

FF6BK2SSRSIF

Refrigerator

05/01/23

SUMMIT

FELIX STORCH, INC.

www.summitappliance.com

718-893-3900