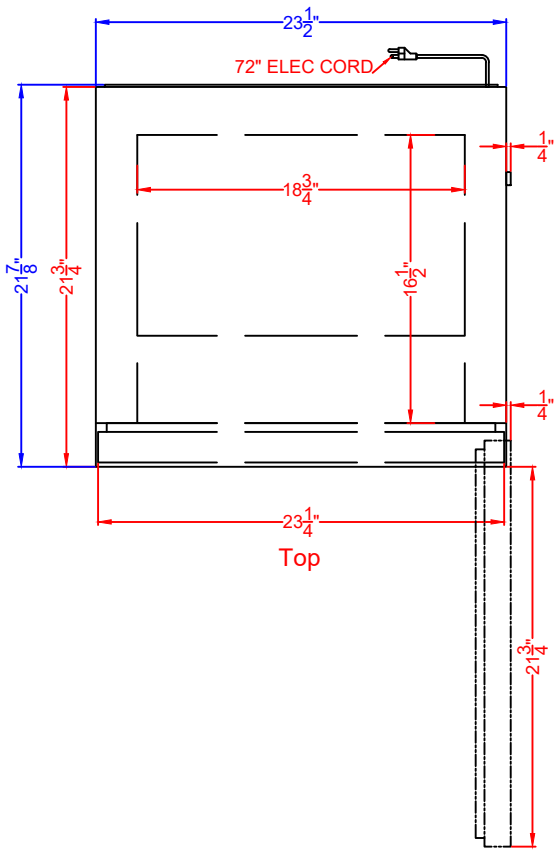

Top

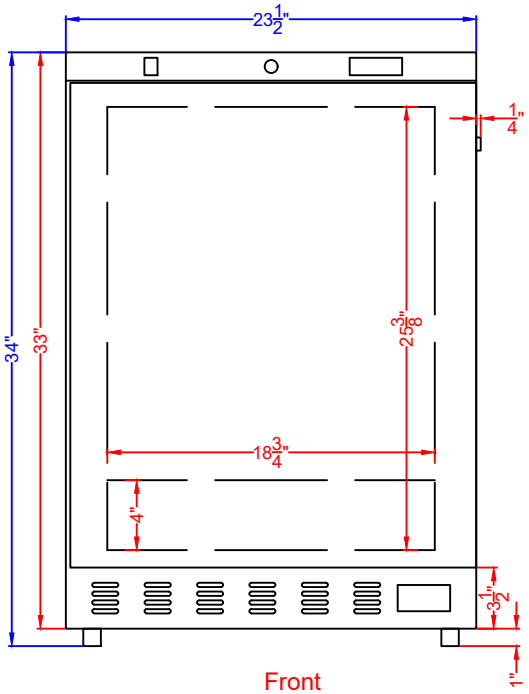

Front

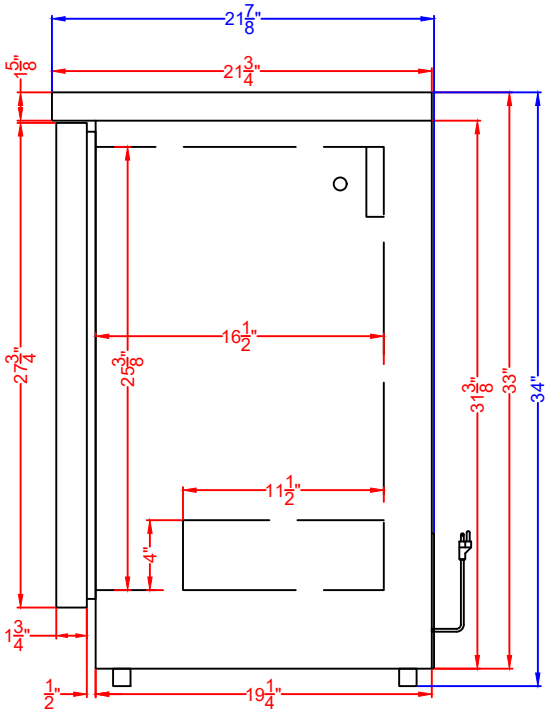

Profile

ACR51W

ACR51WNSF456

Refrigerator

01/30/24

SUMMIT
FELIX STORCH, INC.
www.summitappliance.com
718-893-3900