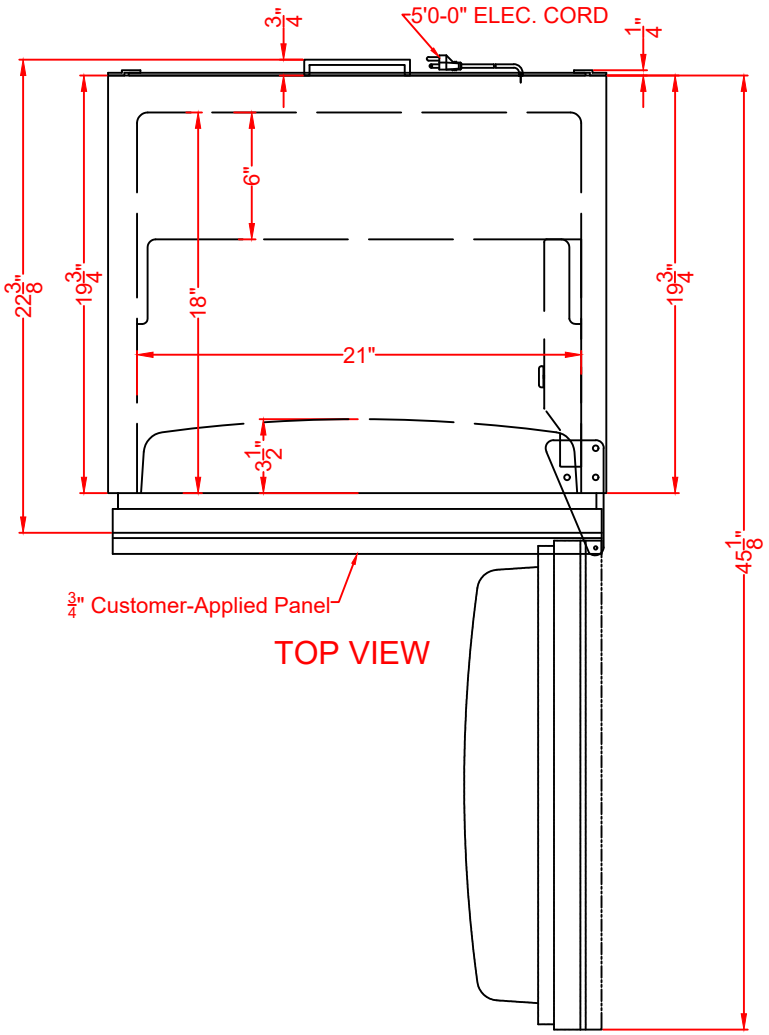

TOP VIEW

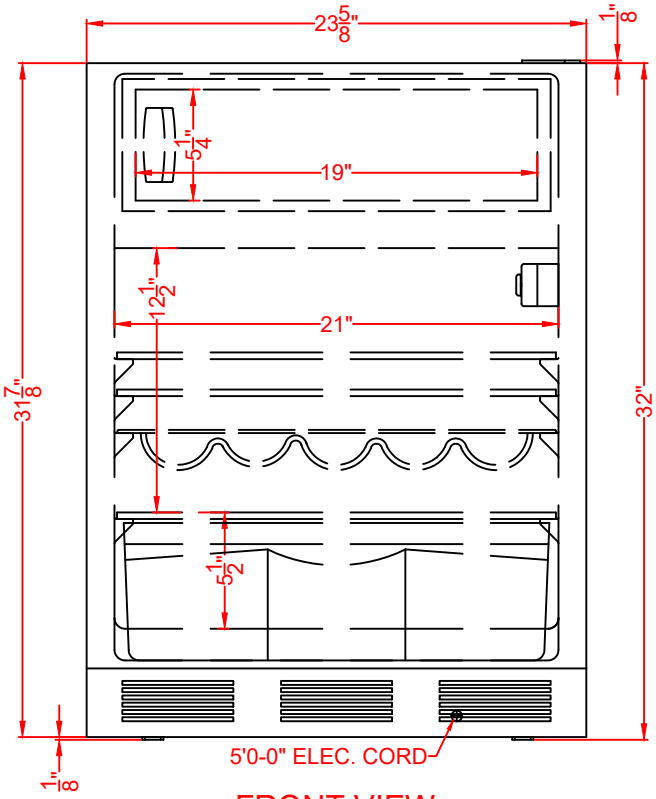

FRONT VIEW

CT66BK2SSIFADA

Refrigerator-Freezer

05/01/23

SUMMIT
FELIX STORCH, INC.
www.summitappliance.com
718-893-3900