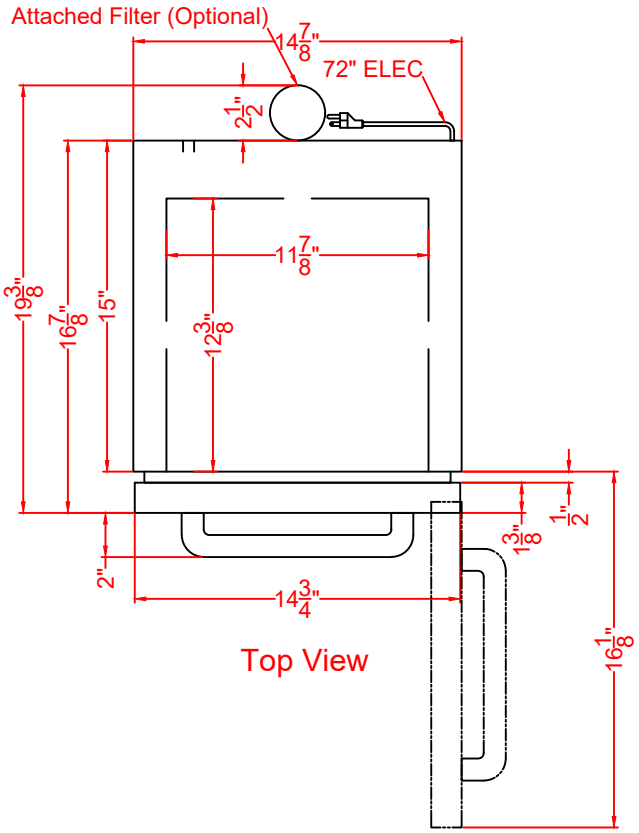

Top View

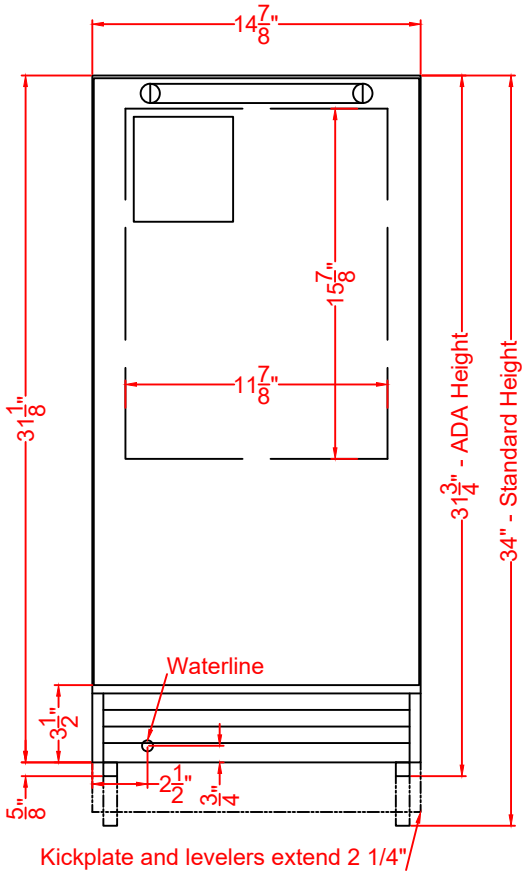

Front View

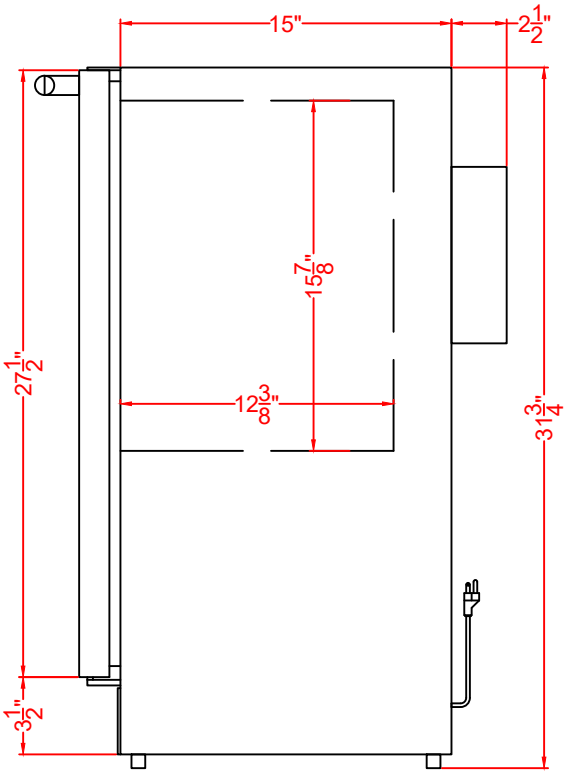

Profile View

BIM26H32

BIM26H34

BIM27OSADA

BIM271OS

Icemaker

10/18/23

SUMMIT
FELIX STORCH, INC.
www.summitappliance.com
718-893-3900